Lines, dimensions

WSB University

IMP PAN GDAŃSK

Department of Turbine Dynamics and Diagnostics

Engineering graphics

Lecture 2

Łukasz Breńkacz, PhD, Eng.

March 06, 2024

Presentation plan

- Introduction
- Lines
- Dimensions
- Summary and conclusions

What have we learned? What are we going to learn?

Introduction

Introduction

Download presentations from the website: www.brenkacz.com

- Introduction
- Lines
- Dimensions
- Summary and conclusions

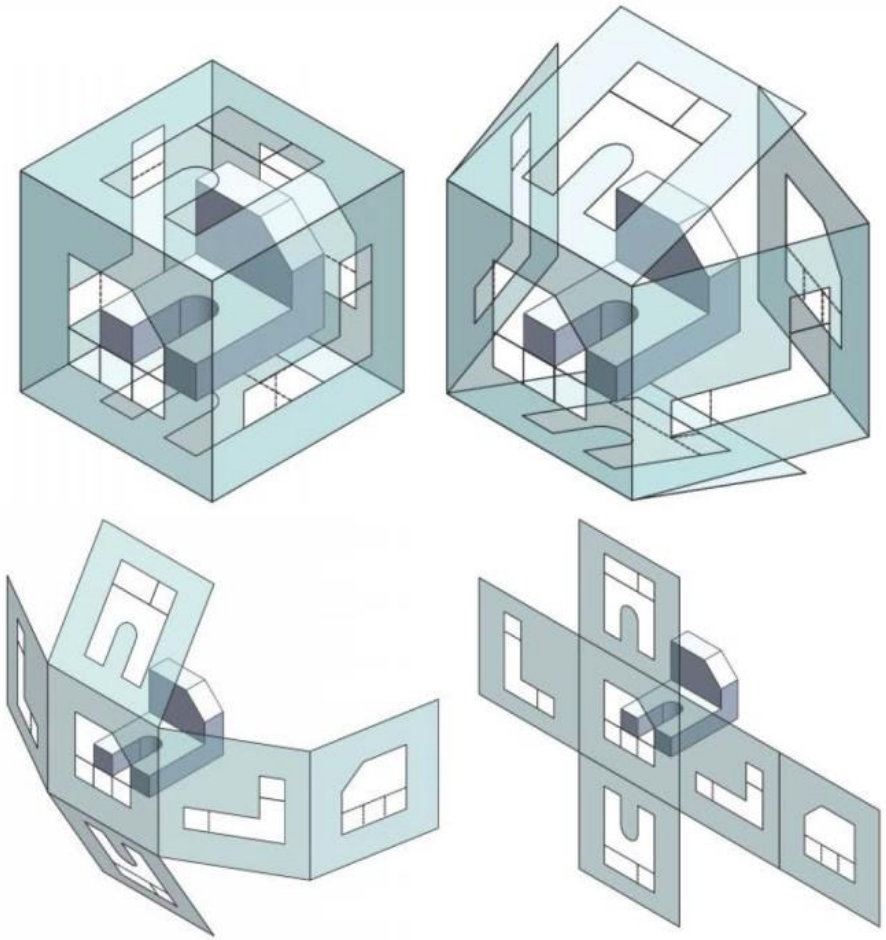

Glass box being unfolded. Gide, A. (2016).

Alphabet of lines

Lines

Thickness

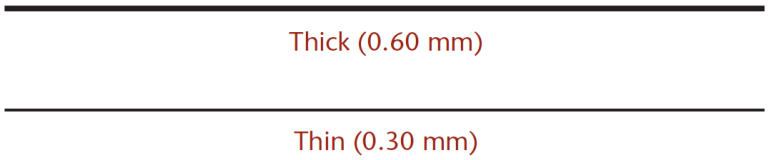

Thick and thin drawing lines. Giesecke, F. E., et al. (2016).

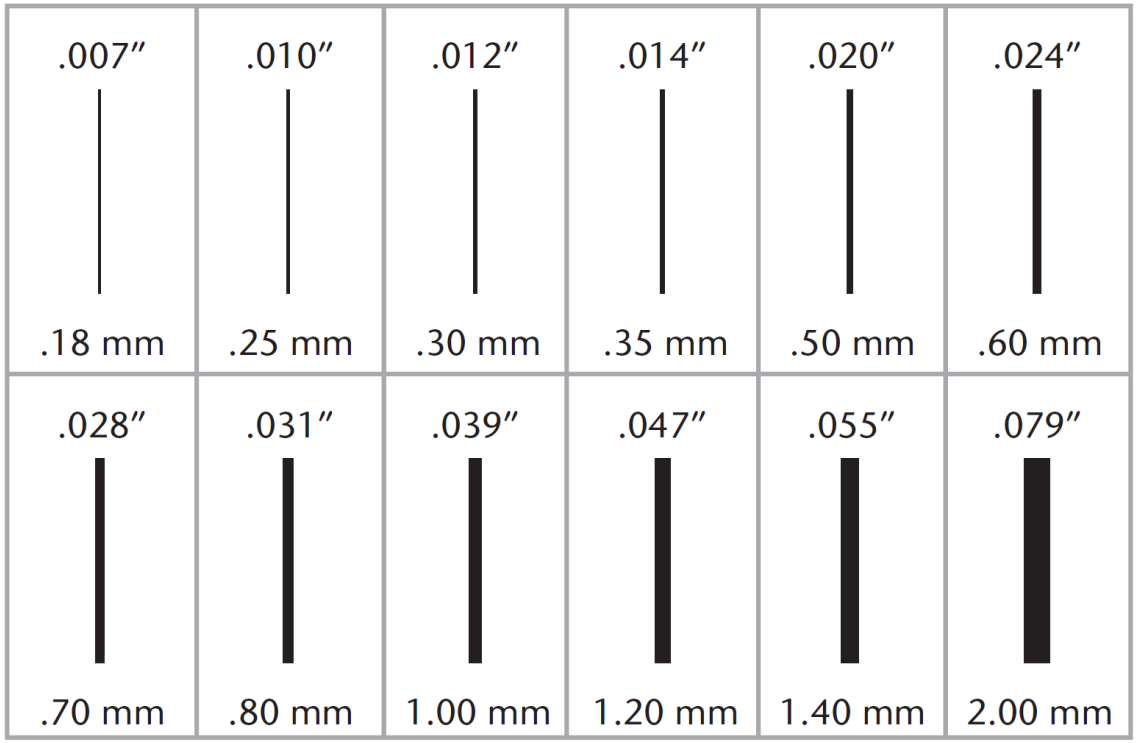

Line thickness. Giesecke, F. E., et al. (2016).

- Introduction
- Lines
  - Thickness
  - Types of lines
  - Axes
  - Phantom line
  - Break line
  - Examples
- Dimensions
- Summary and conclusions

Thickness

- Thin drawing lines should be just as sharp and black but only half the thickness of thick lines.
- Construction lines and lettering guidelines should be thin and light so that they can barely be seen at arm's length and need not be erased.
- All lines should be uniform in width and darkness.

- Introduction
- Lines
  - Thickness
  - Types of lines
  - Axes
  - Phantom line
  - Break line
  - Examples
- Dimensions
- Summary and conclusions

Good and poor freehand line technique. Giesecke, F. E., et al. (2016).

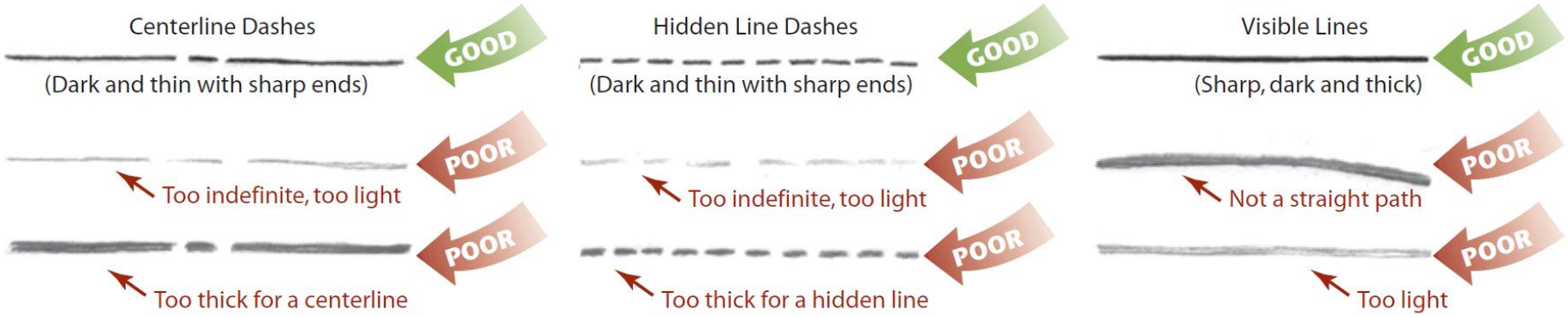

Types of lines

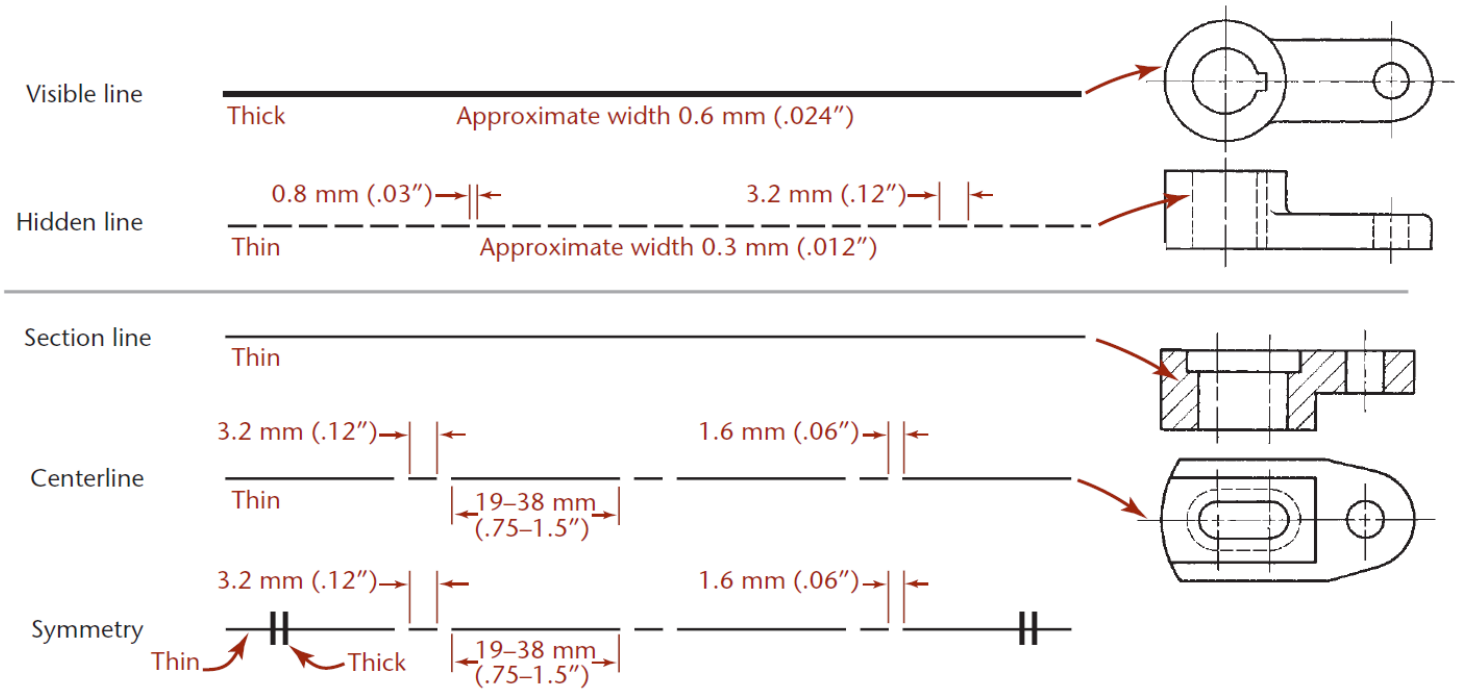

- Introduction
- Lines
  - Thickness
  - Types of lines
  - Axes
  - Phantom line
  - Break line
  - Examples
- Dimensions
- Summary and conclusions

Types of lines

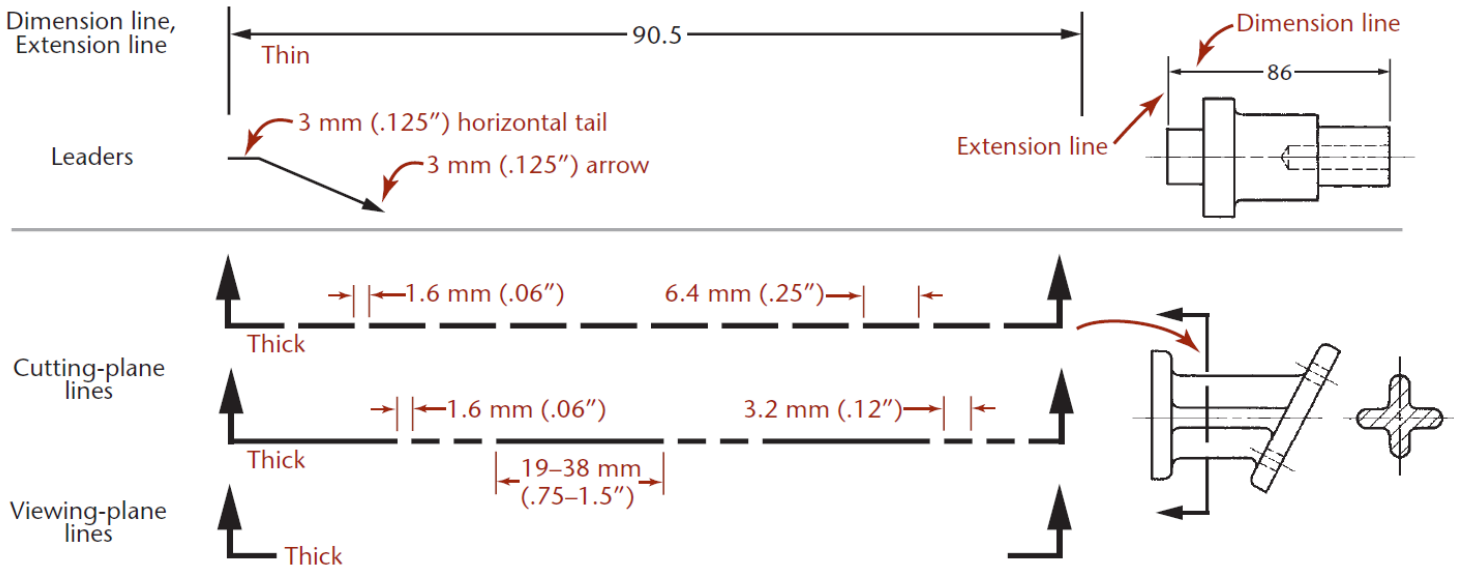

- Introduction
- Lines
  - Thickness
  - Types of lines
  - Axes
  - Phantom line
  - Break line
  - Examples
- Dimensions
- Summary and conclusions

Types of lines

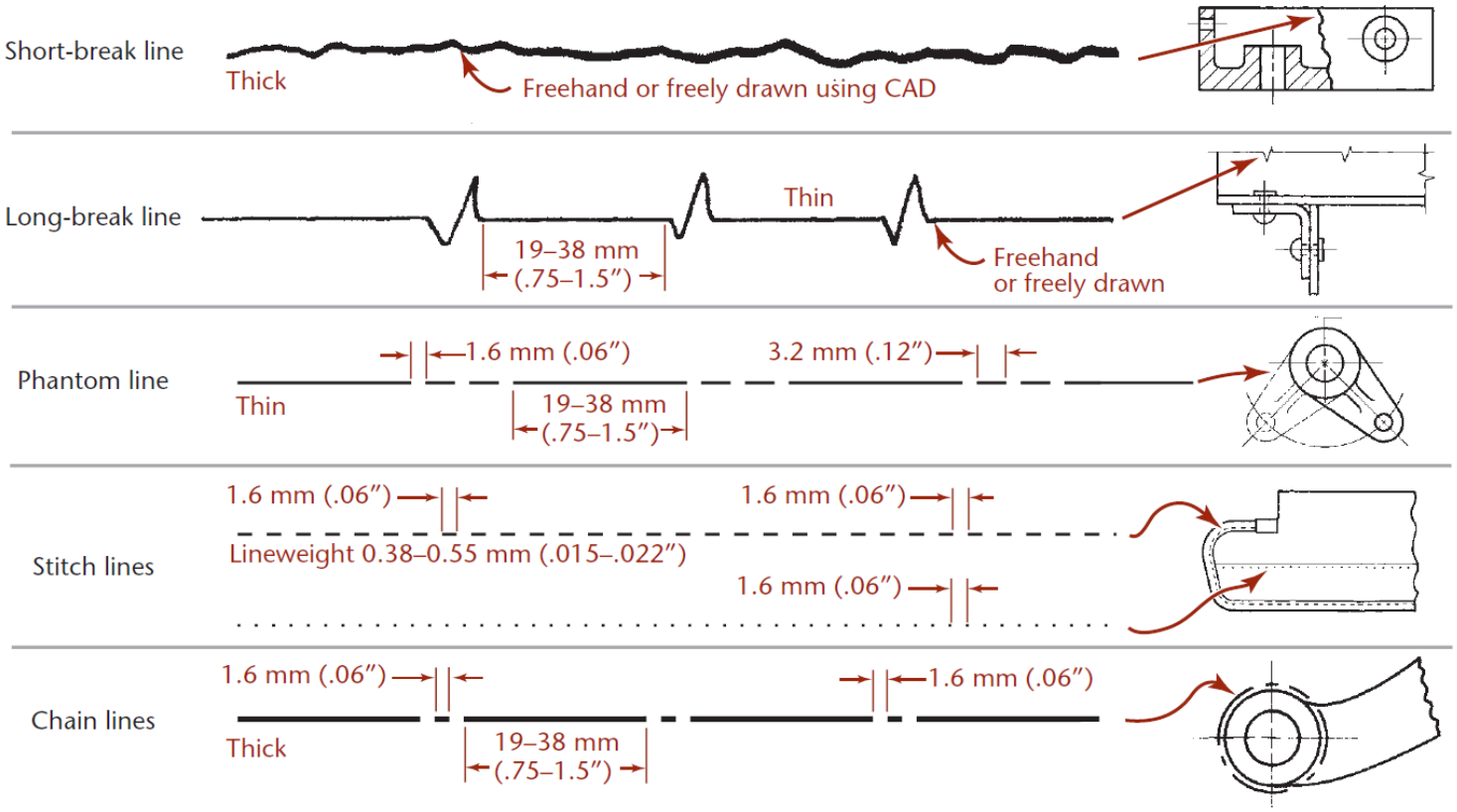

- Introduction
- Lines
  - Thickness
  - Types of lines
  - Axes
  - Phantom line
  - Break line
  - Examples
- Dimensions
- Summary and conclusions

Axes

- Introduction
- Lines
  - Thickness
  - Types of lines
  - Axes
  - Phantom line
  - Break line
  - Examples
- Dimensions
- Summary and conclusions

Axes

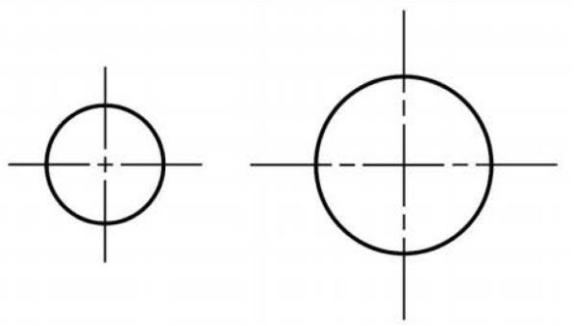

Crossing center lines. Gide, A. (2016).

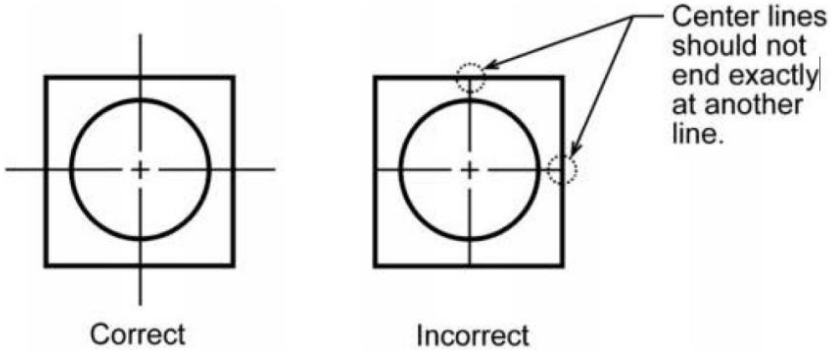

Terminating the center lines. Gide, A. (2016).

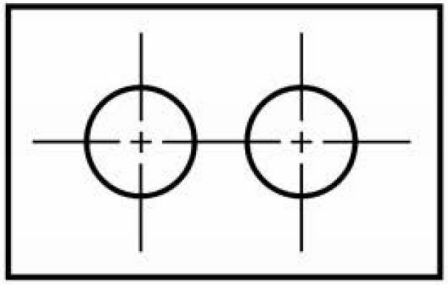

Connecting center lines. Gide, A. (2016).

- Introduction
- Lines
  - Thickness
  - Types of lines
  - Axes
  - Phantom line
  - Break line
  - Examples
- Dimensions
- Summary and conclusions

Phantom lines

- Introduction
- Lines
  - Thickness
  - Types of lines
  - Axes
  - Phantom line
  - Break line
  - Examples
- Dimensions
- Summary and conclusions

Break line

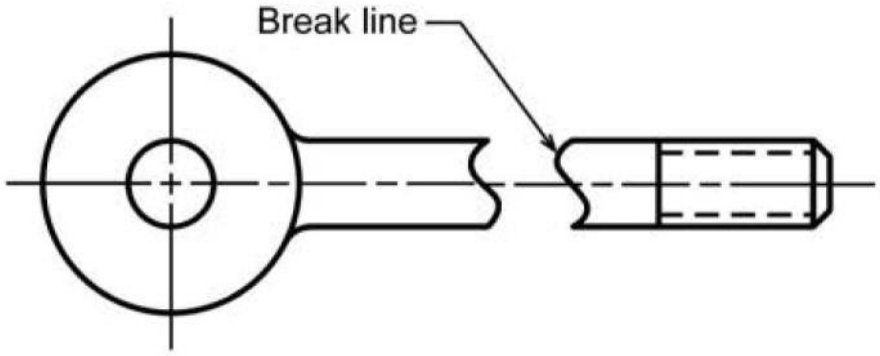

Using break lines. Gide, A. (2016).

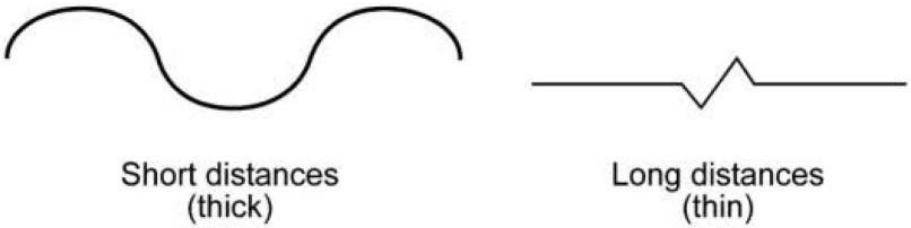

Types of break lines. Gide, A. (2016).

Two lines may occur in the same place. However, only the line that is considered to be the most important is shown. Lines in order of importance are as follows:

1. Cutting plane line
2. Visible line
3. Hidden line
4. Centerline

- Introduction
- Lines
  - Thickness
  - Types of lines
  - Axes
  - Phantom line
  - Break line
  - Examples
- Dimensions
- Summary and conclusions

Examples

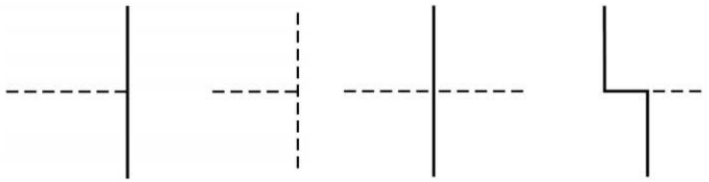

Drawing hidden lines. Gide, A. (2016).

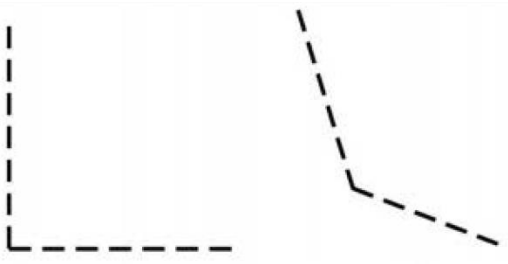

Hidden lines at corner. Gide, A. (2016).

Hidden Lines

- Hidden lines represent edges and boundaries that cannot be seen.
- The length of the hidden line dashes may vary slightly as the size of the drawing changes. For example, a very small part may require smaller dashes.
- Hidden lines should always begin and end with a dash, except when the hidden line begins or ends at a parallel visible line.
- Hidden line dashes should join at corners.

- Introduction
- Lines
  - Thickness
  - Types of lines
  - Axes
  - Phantom line
  - Break line
  - Examples
- Dimensions
- Summary and conclusions

Examples

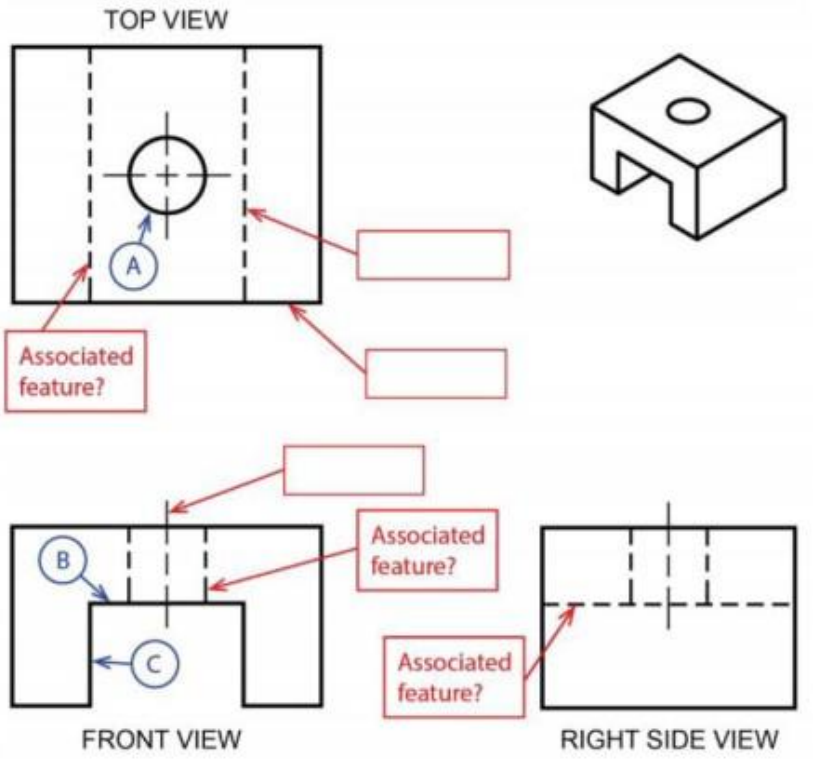

Line identification. Gide, A. (2016).

Line width and type are controlled by the standards.

- The standard recommends using no less than, two line widths.
- Important lines should be twice as thick as the less important thin lines (at least 0.3 mm in width).
- However, to further distinguish line importance, it is good to use four different thicknesses or weights: thin, medium, thick, and very thick.
- The thickness of the lines should be adjusted according to the size and complexity of the part.

- Introduction
- Lines
  - Thickness
  - Types of lines
  - Axes
  - Phantom line
  - Break line
  - Examples
- Dimensions
- Summary and conclusions

Dimensions

Introduction

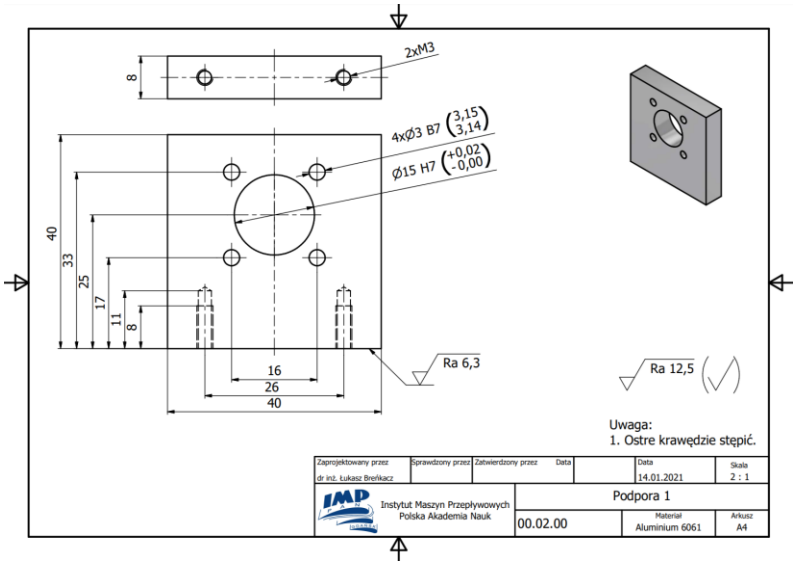

Dimensioned drawing from a solid model.

- It is essential to describe not only the shape of the features you design but also their sizes and locations.
- Dimensions and notes define the size, finish, and other requirements to define what you want manufactured fully.
- Standards organisations prescribe how dimensions should appear and the general rules for their selection and placement in the drawing.
- If you understand how the sizes and locations of model features will be defined, you can plan how to capture this information clearly in the model.

- Introduction
- Lines
- Dimensions
  - Introduction
  - Units
  - Draw
  - Size and location
  - Figures
  - Rules
  - Oblique dimensions
  - Arrowhead
  - Angle
  - Arcs
  - Superfluous dimensions
  - Examples
- Summary and conclusions

Units

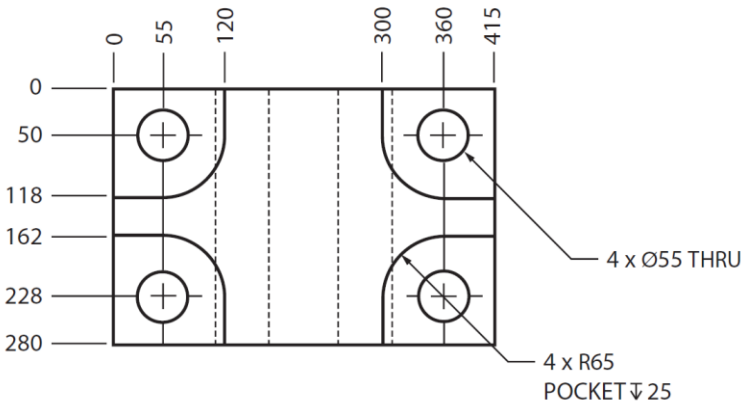

Metric units. Giesecke, F. E., et al. (2016).

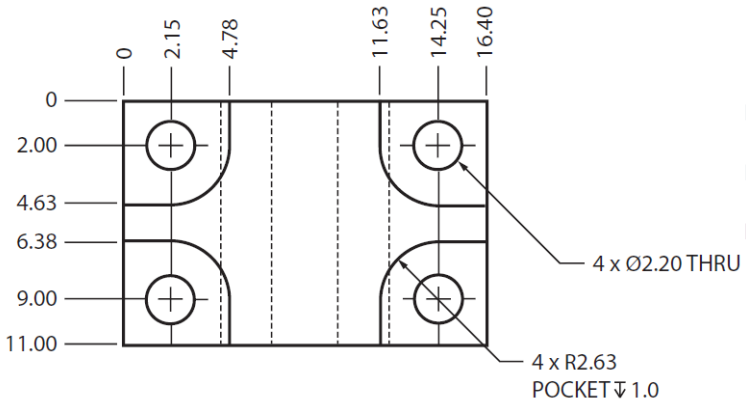

U.S. Customary units. Giesecke, F. E., et al. (2016).

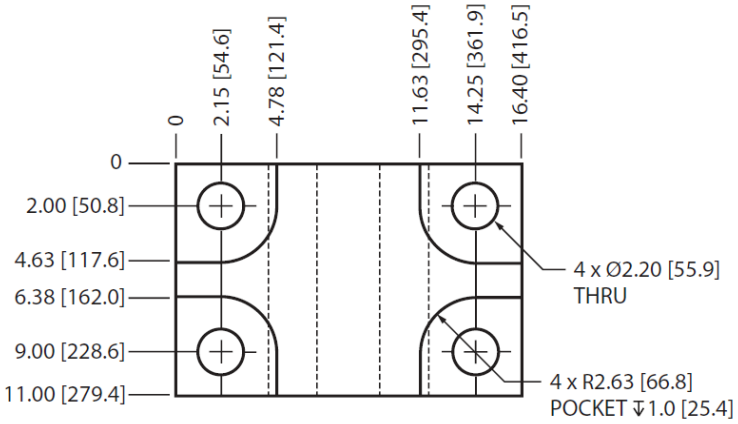

U.S. Customary units as a primary units. Giesecke, F. E., et al. (2016).

- Introduction
- Lines
- Dimensions
  - Introduction
  - Units
  - Draw
  - Size and location
  - Figures
  - Rules
  - Oblique dimensions
  - Arrowhead
  - Angle
  - Arcs
  - Superfluous dimensions
  - Examples
- Summary and conclusions

Draw

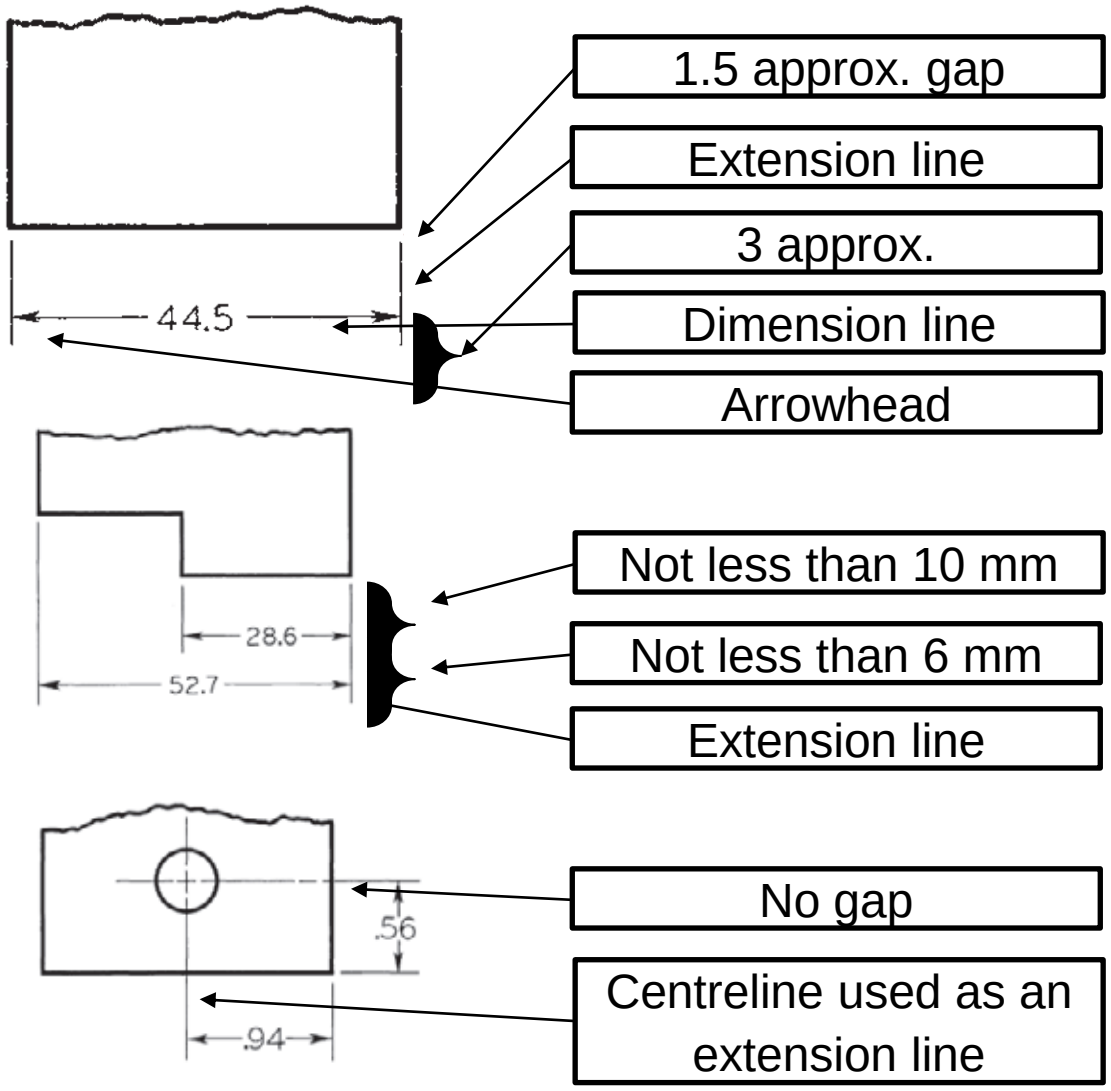

- Introduction
- Lines
- Dimensions
  - Introduction
  - Units
  - Draw
  - Size and location
  - Figures
  - Rules
  - Oblique dimensions
  - Arrowhead
  - Angle
  - Arcs
  - Superfluous dimensions
  - Examples
- Summary and conclusions

Size and location

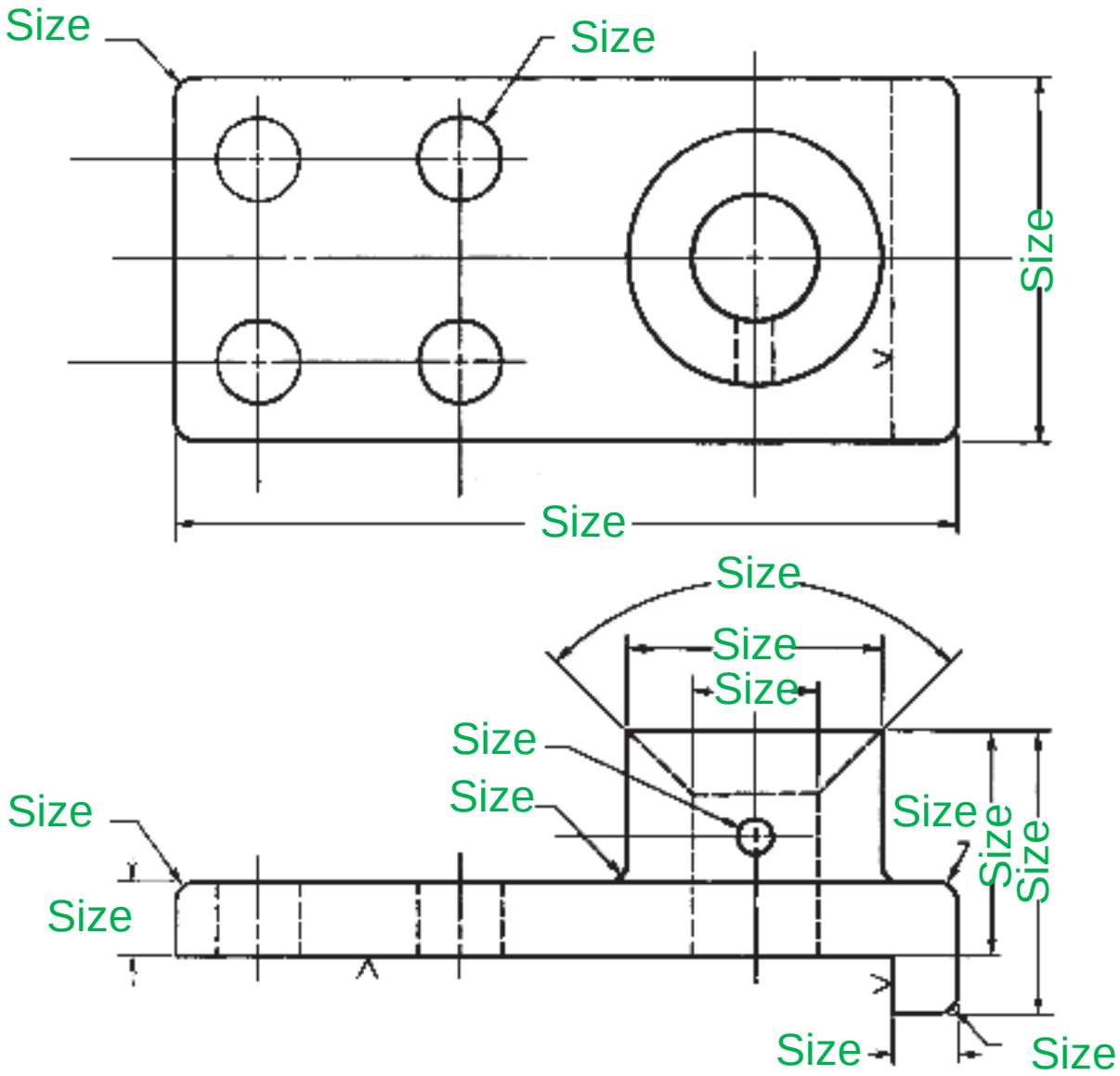

- Introduction
- Lines
- Dimensions
  - Introduction
  - Units
  - Draw
  - Size and location
  - Figures
  - Rules
  - Oblique dimensions
  - Arrowhead
  - Angle
  - Arcs
  - Superfluous dimensions
  - Examples
- Summary and conclusions

Size and location

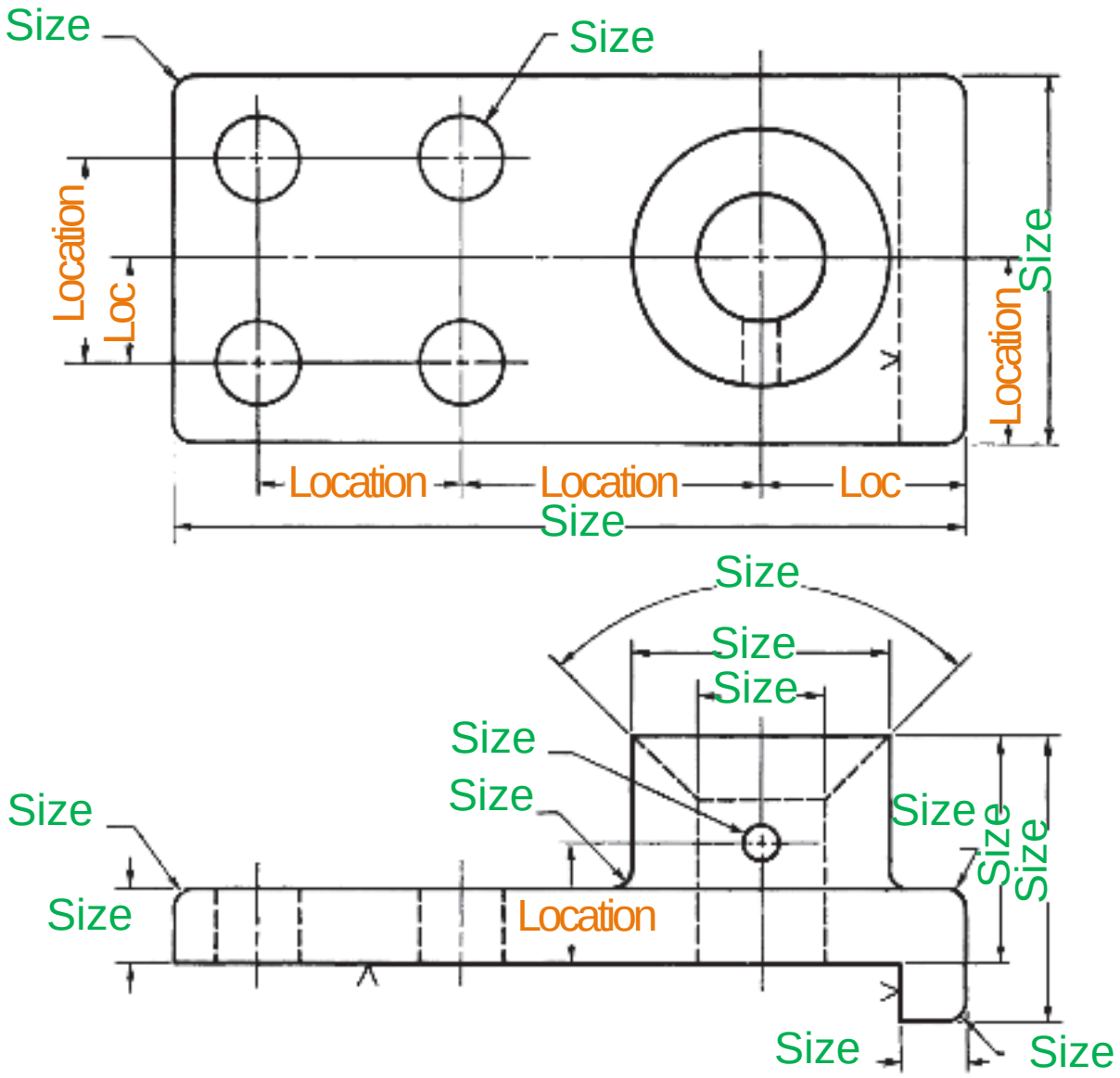

- Introduction
- Lines
- Dimensions
  - Introduction
  - Units
  - Draw
  - Size and location
  - Figures
  - Rules
  - Oblique dimensions
  - Arrowhead
  - Angle
  - Arcs
  - Superfluous dimensions
  - Examples
- Summary and conclusions

Figures

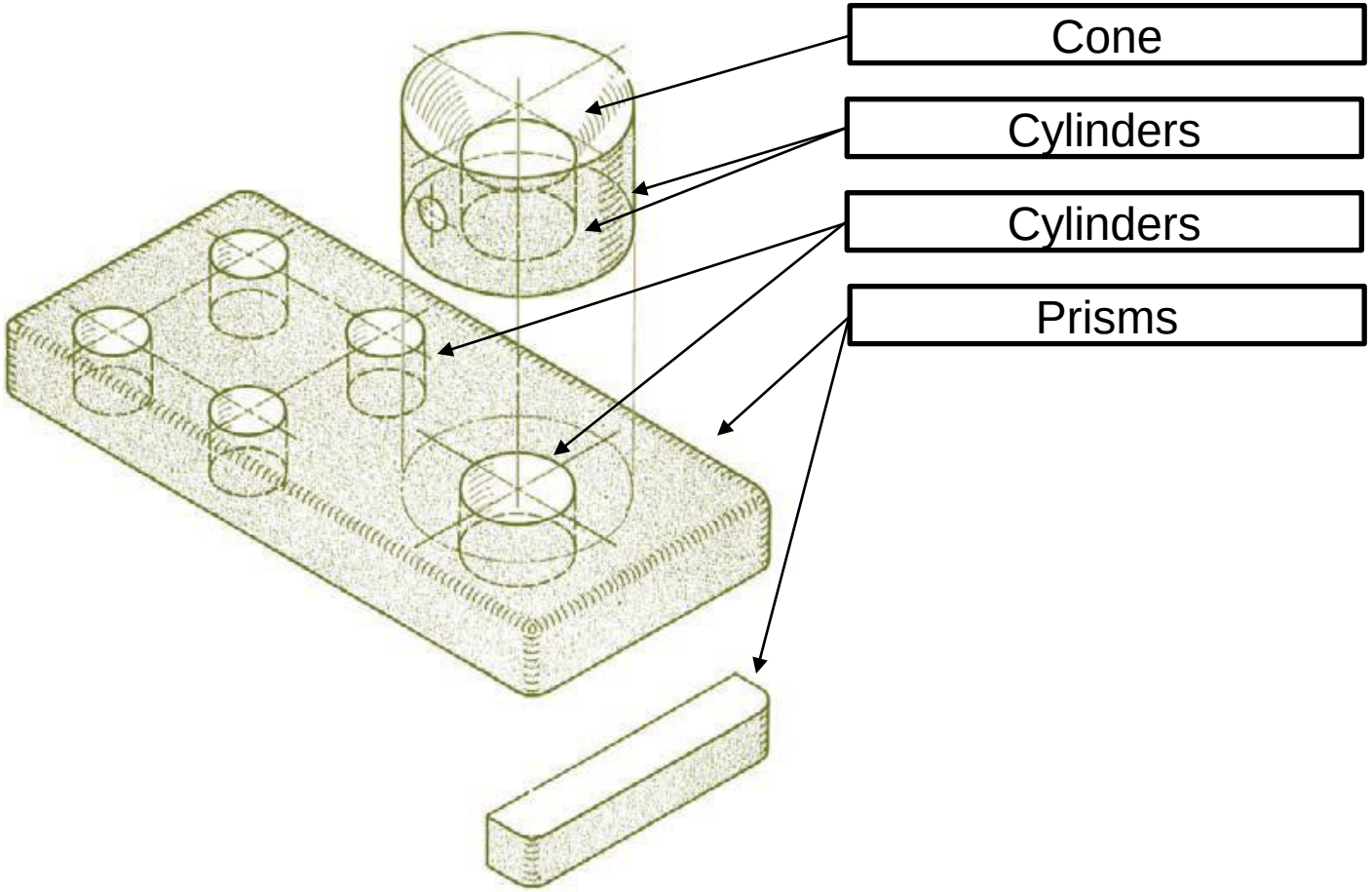

- Introduction
- Lines
- Dimensions
  - Introduction
  - Units
  - Draw
  - Size and location
  - Figures
  - Rules
  - Oblique dimensions
  - Arrowhead
  - Angle
  - Arcs
  - Superfluous dimensions
  - Examples
- Summary and conclusions

Figures

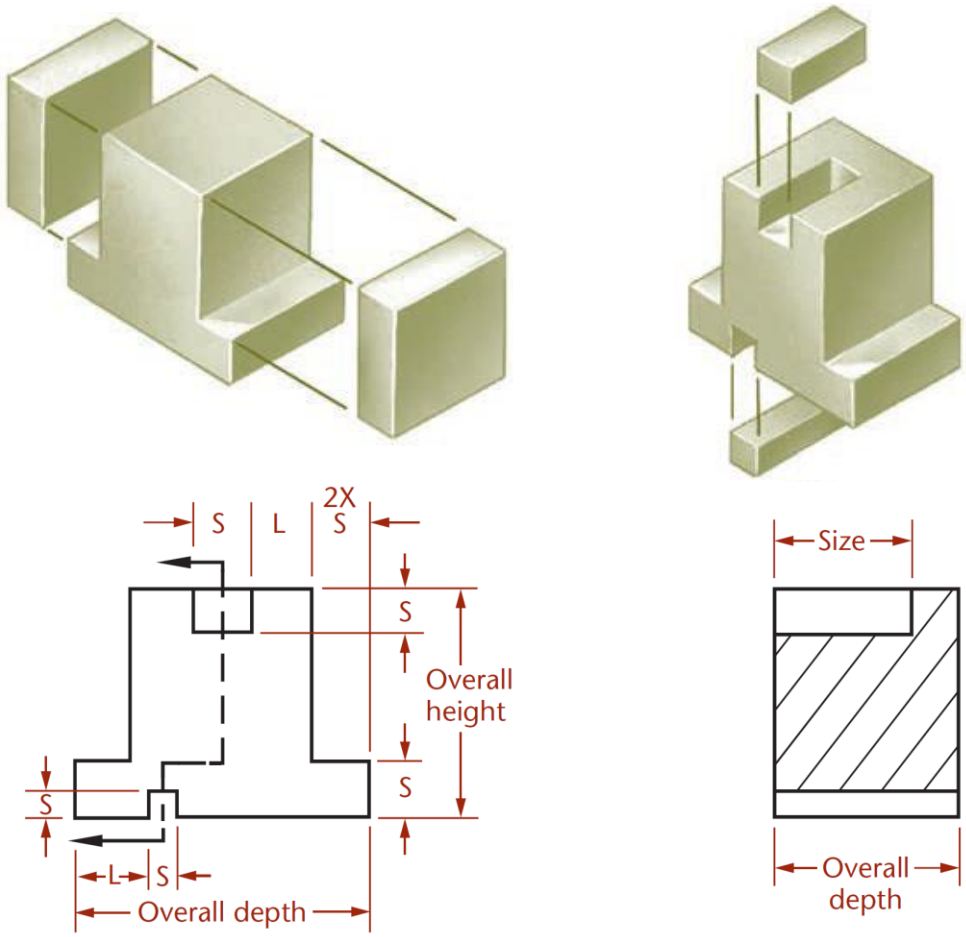

Thinking of dimensioning in terms of material removal

- Introduction
- Lines
- Dimensions
  - Introduction
  - Units
  - Draw
  - Size and location
  - Figures
  - Rules
  - Oblique dimensions
  - Arrowhead
  - Angle
  - Arcs
  - Superfluous dimensions
  - Examples
- Summary and conclusions

Figures

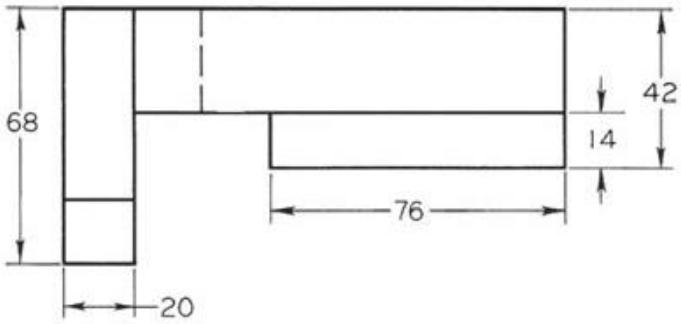

Cutter block for milling fixture

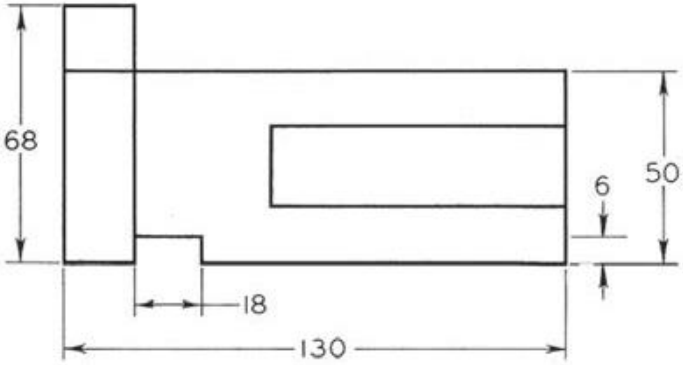

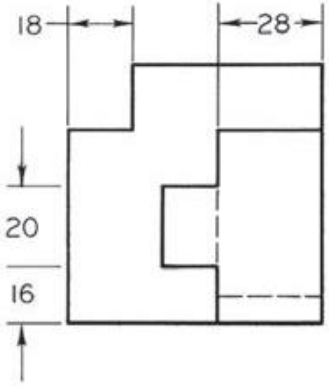

Dimensioning a machine part composed of prismatic shapes

- Introduction
- Lines
- Dimensions
  - Introduction
  - Units
  - Draw
  - Size and location
  - Figures
  - Rules
  - Oblique dimensions
  - Arrowhead
  - Angle
  - Arcs
  - Superfluous dimensions
  - Examples
- Summary and conclusions

Figures

- Introduction
- Lines
- Dimensions
  - Introduction
  - Units
  - Draw
  - Size and location
  - Figures
  - Rules
  - Oblique dimensions
  - Arrowhead
  - Angle
  - Arcs
  - Superfluous dimensions
  - Examples
- Summary and conclusions

Rules

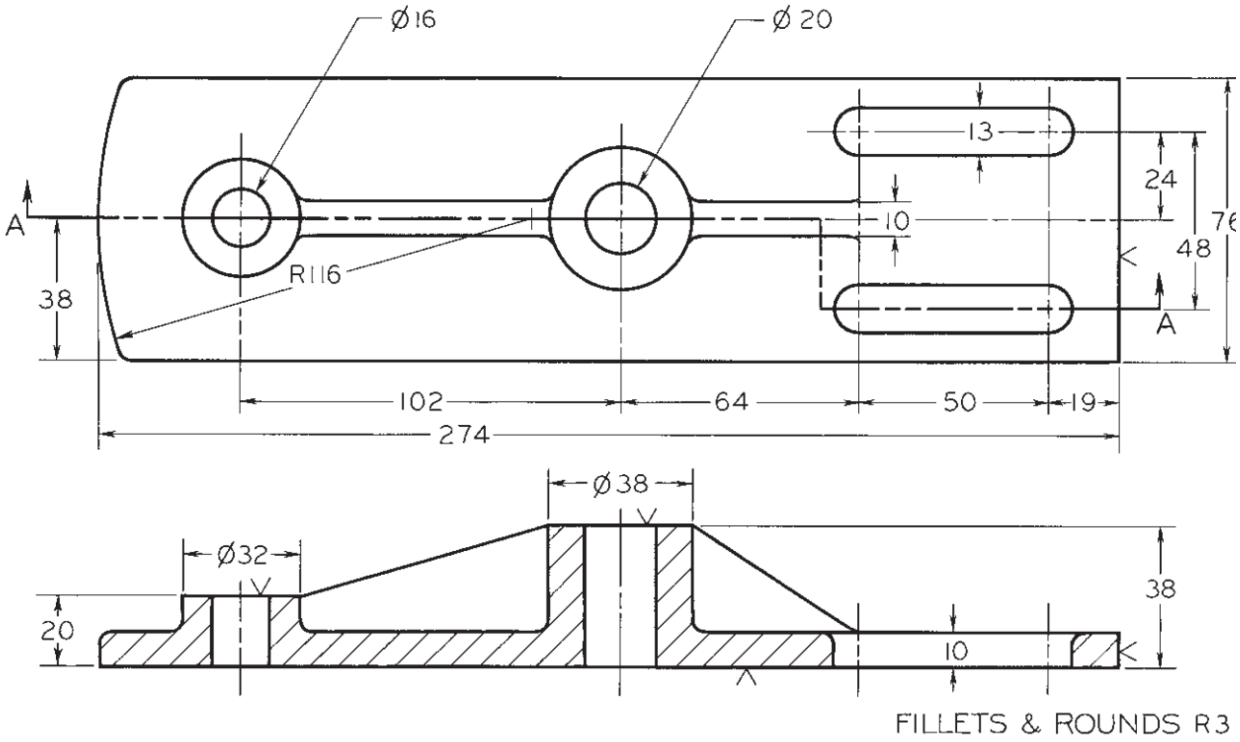

A drawing.

Three aspects of good dimensioning

1. Technique of dimensioning

2. Placement of dimensions

3. Choice of dimensions

- Introduction
- Lines
- Dimensions
  - Introduction
  - Units
  - Draw
  - Size and location
  - Figures
  - Rules
  - Oblique dimensions
  - Arrowhead
  - Angle
  - Arcs
  - Superfluous dimensions
  - Examples
- Summary and conclusions

Rules

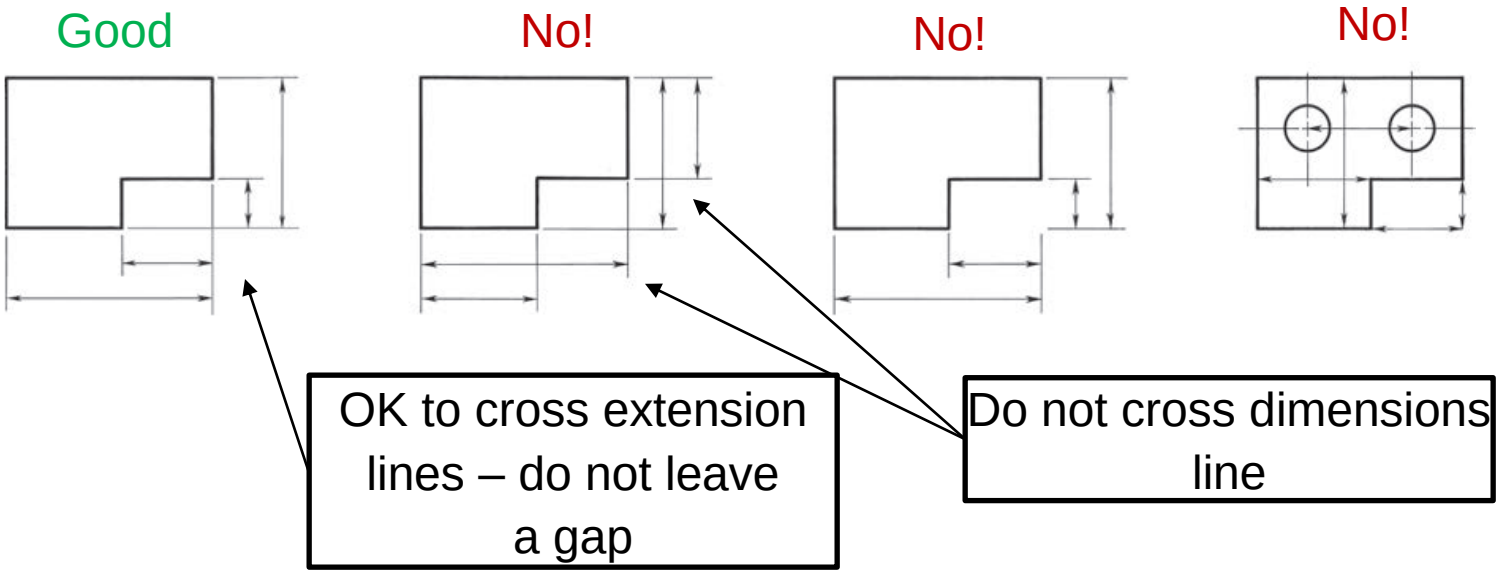

- Introduction
- Lines
- Dimensions
  - Introduction
  - Units
  - Draw
  - Size and location
  - Figures
  - Rules
  - Oblique dimensions
  - Arrowhead
  - Angle
  - Arcs
  - Superfluous dimensions
  - Examples
- Summary and conclusions

Rules

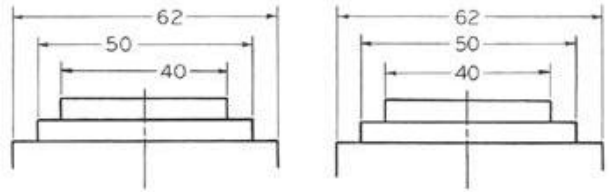

Staggered numerals, metric.

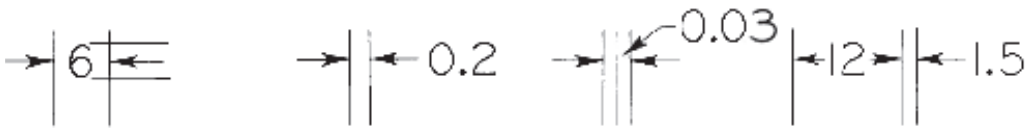

Fitting dimension values in limited spaces.

Good Good No!

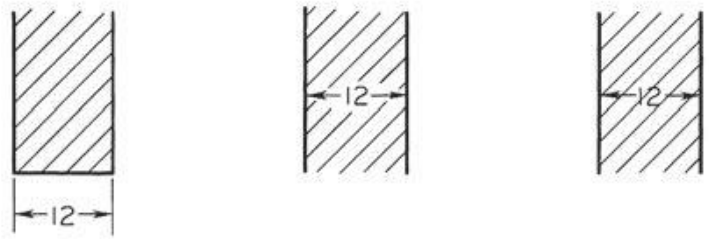

Dimensions and selectin lines.

- Introduction
- Lines
- Dimensions
  - Introduction
  - Units
  - Draw
  - Size and location
  - Figures
  - Rules
  - Oblique dimensions
  - Arrowhead
  - Angle
  - Arcs
  - Superfluous dimensions
  - Examples
- Summary and conclusions

Rules

Good

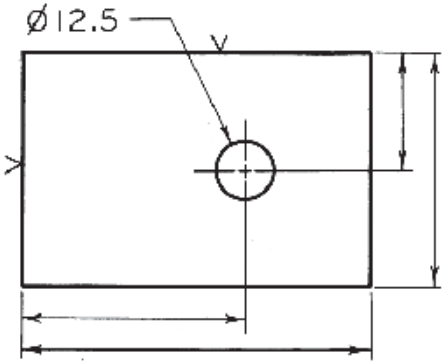

Preferred dimension placement is off the view.

No!

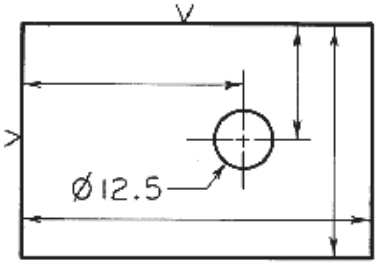

Do not place dimension on the view except to enhance clarity.

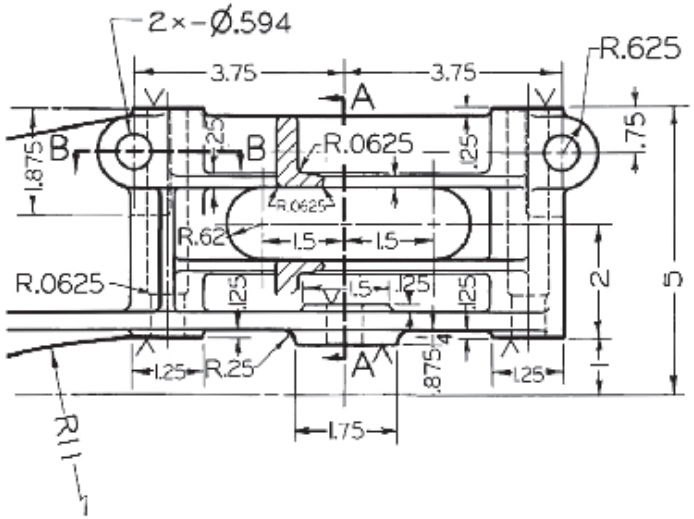

Dimensions placed on view help clarity on a complex drawing.

- Introduction
- Lines
- Dimensions
  - Introduction
  - Units
  - Draw
  - Size and location
  - Figures
  - Rules
  - Oblique dimensions
  - Arrowhead
  - Angle
  - Arcs
  - Superfluous dimensions
  - Examples
- Summary and conclusions

Oblique dimensions

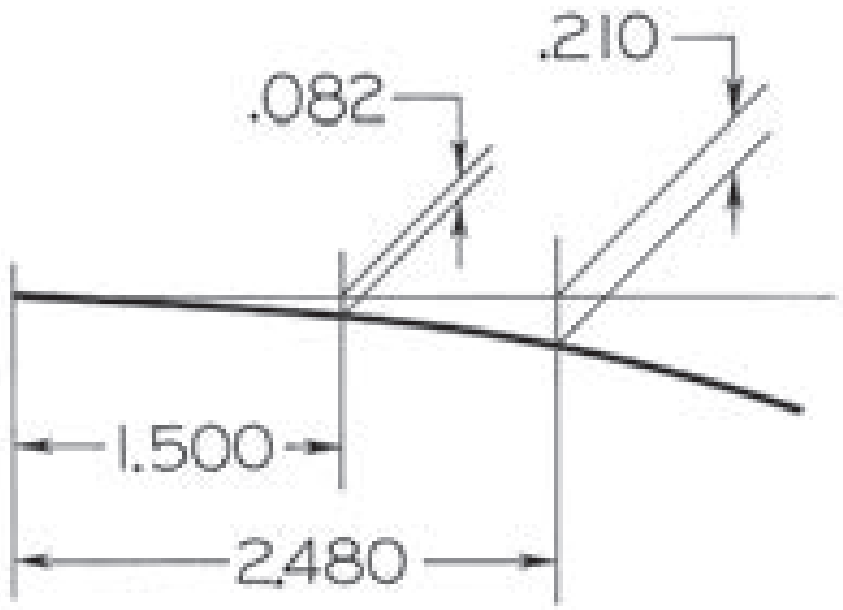

Oblique extension.

- Introduction
- Lines
- Dimensions
  - Introduction
  - Units
  - Draw
  - Size and location
  - Figures
  - Rules
  - Oblique dimensions
  - Arrowhead
  - Angle
  - Arcs
  - Superfluous dimensions
  - Examples
- Summary and conclusions

Arrowhead

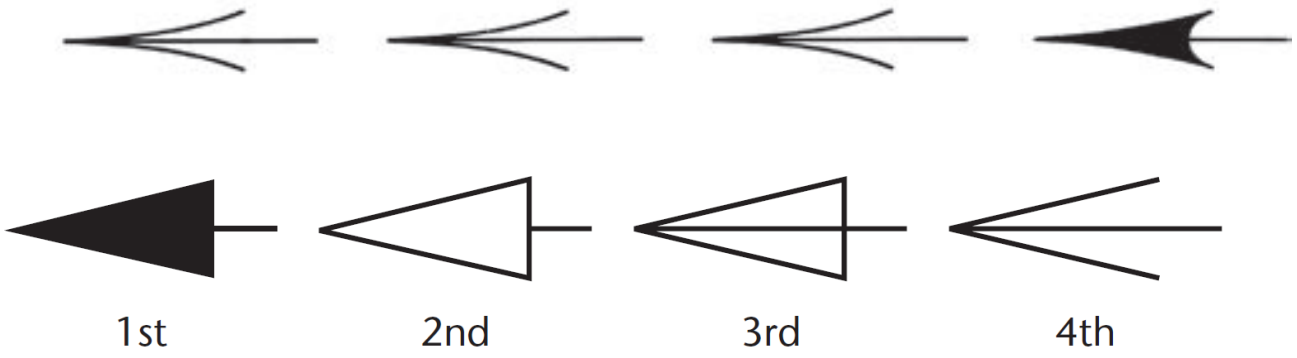

Order of preference for arrow styles.

Sketch arrowheads freehand so that the length and width have a ratio of 3:1. The length of the arrowhead should be equal to the height of the dimension values (about 3mm or 18 long).

- Introduction
- Lines
- Dimensions
  - Introduction
  - Units
  - Draw
  - Size and location
  - Figures
  - Rules
  - Oblique dimensions
  - Arrowhead
  - Angle
  - Arcs
  - Superfluous dimensions
  - Examples
- Summary and conclusions

- Introduction
- Lines
- Dimensions
  - Introduction
  - Units
  - Draw
  - Size and location
  - Figures
  - Rules
  - Oblique dimensions
  - Arrowhead
  - Angle
  - Arcs
  - Superfluous dimensions
  - Examples
- Summary and conclusions

Arcs

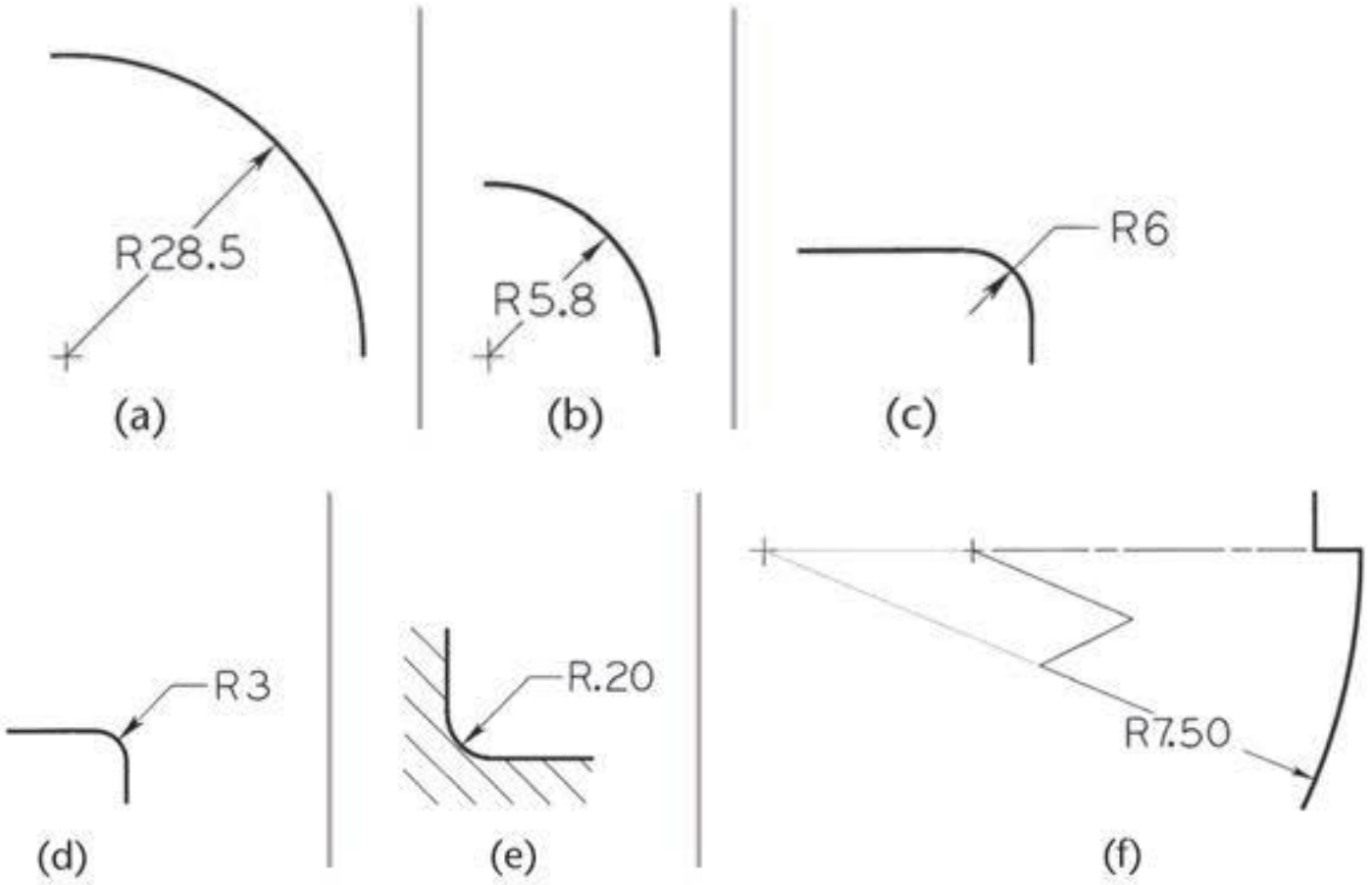

- Introduction
- Lines
- Dimensions
  - Introduction
  - Units
  - Draw
  - Size and location
  - Figures
  - Rules
  - Oblique dimensions
  - Arrowhead
  - Angle
  - Arcs
  - Superfluous dimensions
  - Examples
- Summary and conclusions

Dimensioning arcs.

Superfluous dimensions

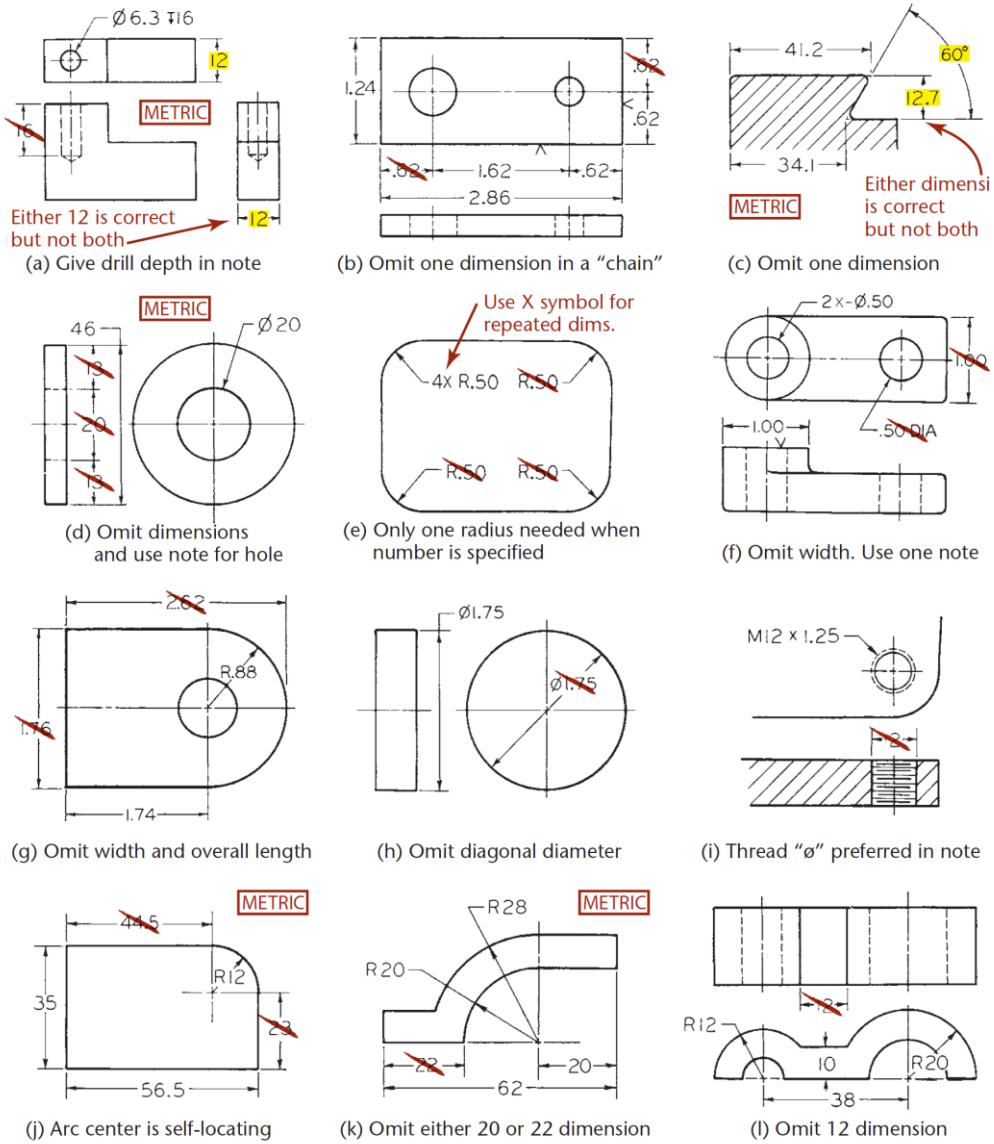

- Introduction
- Lines
- Dimensions
  - Introduction
  - Units
  - Draw
  - Size and location
  - Figures
  - Rules
  - Oblique dimensions
  - Arrowhead
  - Angle
  - Arcs
  - Superfluous dimensions
  - Examples
- Summary and conclusions

Superfluous dimensions.

Examples

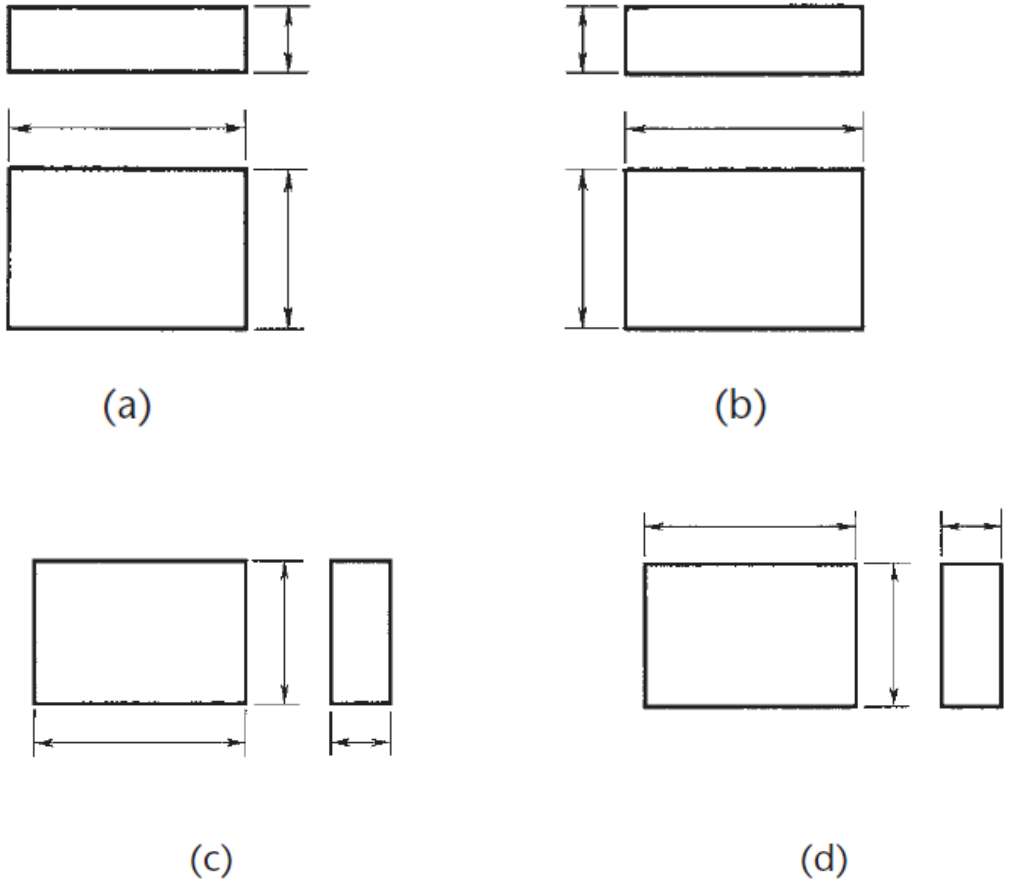

- Introduction
- Lines
- Dimensions
  - Introduction
  - Units
  - Draw
  - Size and location
  - Figures
  - Rules
  - Oblique dimensions
  - Arrowhead
  - Angle
  - Arcs
  - Superfluous dimensions
  - Examples
- Summary and conclusions

Dimensioning rectangular prisms.

Examples

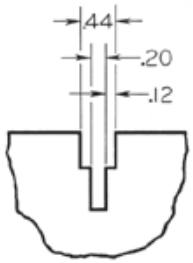

Good

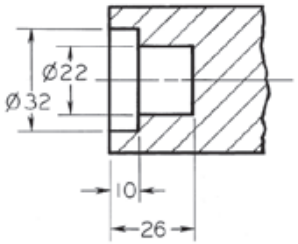

No!

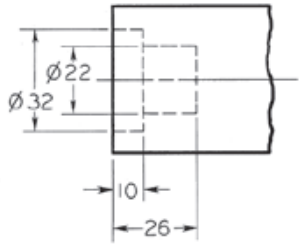

Placement of dimensions.

Good

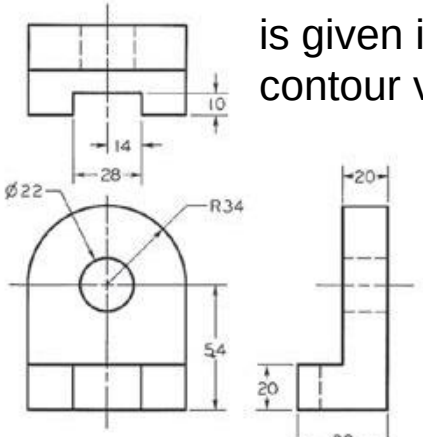

Each dimension is given in the contour view.

No!

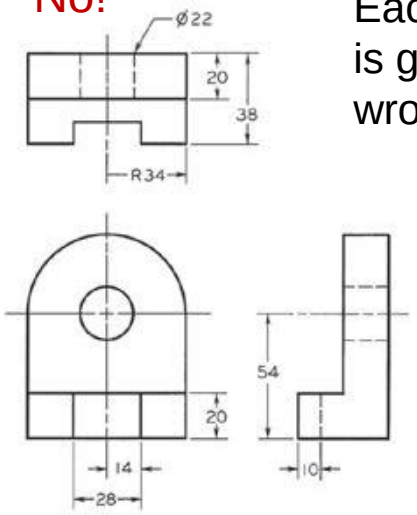

Each dimension is given in the wrong view.

Place dimensions where the contours of the object are defined.

- Introduction
- Lines
- Dimensions
  - Introduction
  - Units
  - Draw
  - Size and location
  - Figures
  - Rules
  - Oblique dimensions
  - Arrowhead
  - Angle
  - Arcs
  - Superfluous dimensions
  - Examples
- Summary and conclusions

Examples

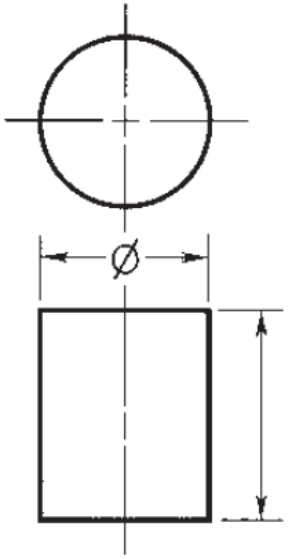

(a)

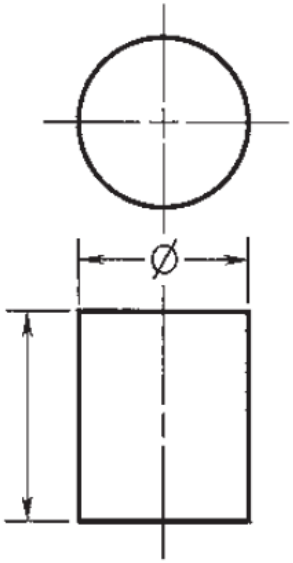

(b)

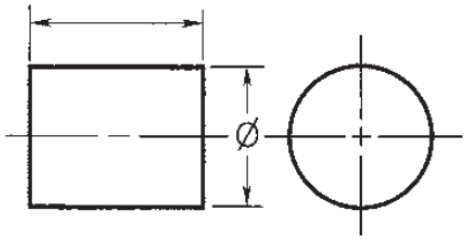

(c)

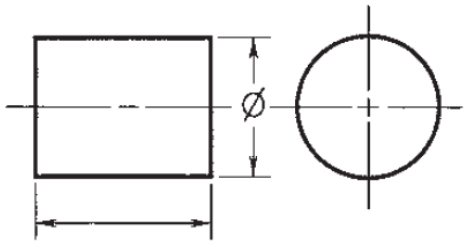

(d)

Dimensioning cylinders.

- Introduction
- Lines
- Dimensions
  - Introduction
  - Units
  - Draw
  - Size and location
  - Figures
  - Rules
  - Oblique dimensions
  - Arrowhead
  - Angle
  - Arcs
  - Superfluous dimensions
  - Examples
- Summary and conclusions

Examples

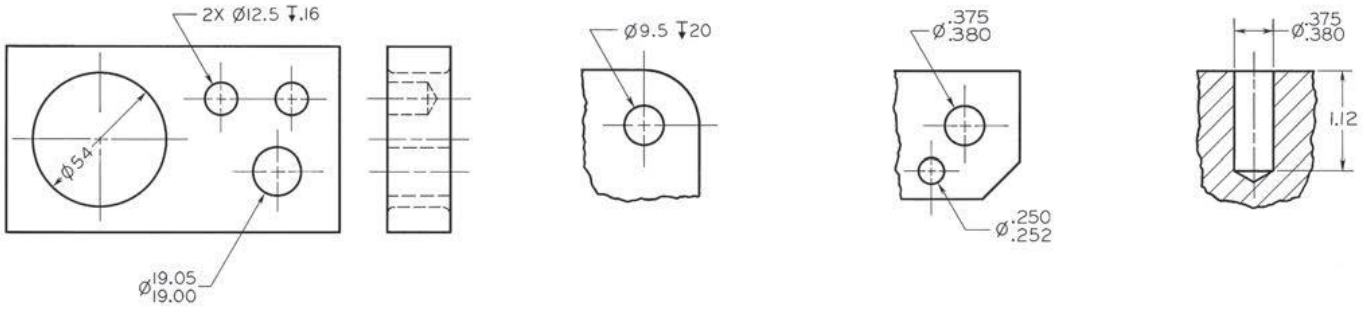

Dimensioning holes.

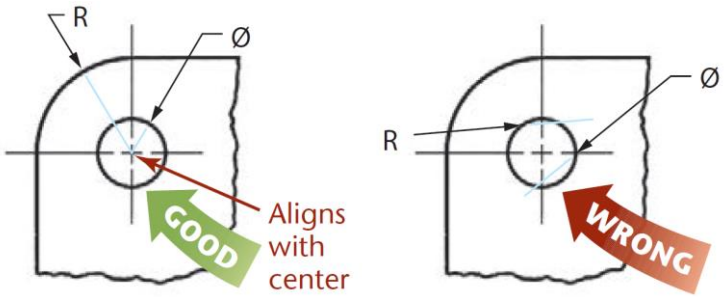

Good and bad examples of radial leader lines.

- Introduction
- Lines
- Dimensions
  - Introduction
  - Units
  - Draw
  - Size and location
  - Figures
  - Rules
  - Oblique dimensions
  - Arrowhead
  - Angle
  - Arcs
  - Superfluous dimensions
  - Examples
- Summary and conclusions

Summary and conclusions

Introduction.

Lines.

Dimensions.

What we have learn today.

- Introduction
- Lines
- Dimensions
- Summary and conclusions
  - Summary and conclusions
  - Bibliography

Bibliography

Bibliography

Gide, A. (2016). *Engineering graphics essentials. Text and digital learning* (5th ed.).

Giesecke, F. E., Lockhart, S., Goodman, M., & Johnson, C. M. (2016). *Technical Drawing with Engineering Graphics* (15th ed.). Pearson. https://www.peachpit.com/articles/article.aspx?p=2731939&seqNum=20.

- Introduction
- Lines
- Dimensions
- Summary and conclusions
  - Summary and conclusions
  - Bibliography

Engineering graphics

Lecture 2

Łukasz Breńkacz, PhD, Eng.

Photo from: https://planetware.com/