Mechanical Systems and Signal Processing 151 (2021) 107423

Contents lists available at ScienceDirect

Mechanical Systems and Signal Processing

journal homepage: www.elsevier.com/locate/ymssp

Research and applications of active bearings: A state-of-the-art review

Łukasz Breńkacz [a,*], Łukasz Witanowski [a], Marta Drosińska-Komor [b], Natalia Szewczuk-Krypa [b]

[a] Institute of Fluid Flow Machinery, Polish Academy of Sciences, Fiszera 14, 80-283 Gdansk, Poland
[b] Gdańsk University of Technology, Narutowicza 11, 80-233 Gdansk, Poland

ARTICLE INFO

Article history:
Received 15 July 2020
Received in revised form 15 October 2020
Accepted 3 November 2020

Keywords:
Active bearings
Controllable bearings
Active magnetic bearings
Fluid bearings
Hydrodynamic bearings
Hydrostatic bearings
Gas bearings
Ball bearings
Hybrid bearings
Vibration
Mechanical devices
Condition monitoring
Rotor faults
Rotor dynamics

ABSTRACT

Controllable/active bearings are mainly associated with active magnetic bearings (AMBs), whereas active bearing control is also found in many types of bearings, e.g. fluid, gas and hybrid bearings. The article presents a review of the literature describing the structure and results of studies of active bearings. Active control brings a number of benefits resulting in the fact that their use as a support for rotors becomes increasingly common. This article introduces readers to the different methods of controlling radial bearings and provides detailed information on various technical solutions. Furthermore, the paper presents the characteristics of bearings as well as the basic advantages, disadvantages and possibilities offered by active control of various types of bearings. The influence of active control on rotor dynamics as well as on bearing friction, temperature control, permissible operating time, the environment (possibility of using safer lubricants) and operating safety is presented. The final part of the article presents possible directions of development of active bearings (ABs).

1. Introduction

A bearing is a component of a machine that ensures relative movement only in the desired directions. It reduces friction between moving parts. The design of a radial bearing can provide, for example, free rotation around a selected axis [1]. There are many different ways of classifying bearings, however, the division is usually based on the type of operation and type of lubrication. In the division based on the type of operation, the most frequently mentioned are radial, axial and axial-radial bearings combining the features of the former two. This article concerns the description of radial bearings and their capability to control transverse vibrations. There are many other types of bearings, e.g. axial bearings, which can also be controllable [2]. The literature describes attempts connected with active damping of other types of vibrations (e.g. torsional [3] or axial vibrations), but this article contains information concerning mainly damping of transverse vibrations, i.e. those most often analyzed for this type of bearings. The number of scientific articles on controllable bearings is increasing by the year

* Corresponding author.
E-mail address: lukasz.brenkacz@imp.gda.pl (Ł. Breńkacz).
URL: http://www.brenkacz.com (Ł. Breńkacz).

https://doi.org/10.1016/j.ymssp.2020.107423
0888-3270/

and at the same time, there are no publications that compile different concepts and types of active control. The purpose of this article is to fill this gap by presenting not only the design of bearings but also their influence on the rotor dynamics and the results of research on them.

Radial bearings can be divided into the following types, depending on their operation (Fig. 1): plain bearings, rolling element bearings, fluid bearings (aerostatic, aerodynamic, hydrostatic [4], hydrodynamic, mixed and porous [5]), magnetic bearings and hybrid bearings that can be a combination of the types that have just been mentioned. All types of bearings can be controlled in some way, which has a positive effect on their performance parameters [6–9]. Magnetic, gas and fluid bearings can be controlled directly, while the rest of the bearings can be controlled by combining them into so-called hybrid bearings.

Each type of bearing offers different properties, therefore can be used in different devices. An example of the use of different types of bearings was presented by Ł. Breńkacz et al. in papers analyzing the choice of bearings for ORC-based 1 kW [10], 30 kW [11] and 700 kW [12] microturbines. These papers demonstrated that when choosing the right bearing system, it is important to take into account more than just the properties of the bearings themselves. The choice is also influenced by the dynamic properties of the rotor-bearing system, which changes when the type of bearing changes. There is a number of factors to consider when choosing the right bearing system. Characteristics of bearings include, for example different speed ranges [13]. The influence of bearings on the dynamics of the rotor-bearing system is very clearly discernible (e.g. by the need to use smaller/larger rotor diameters) [12,14].

Division of a bearing system by properties can be complicated as new modified versions of classic designs are being introduced. Such modifications include for example the bearing being manufactured with greater precision, with the use of new and better materials (which shift the limit of applicability of a given type of bearing) or with additional grooves [17]. Typically, the possibilities of using different types of bearings can also be extended by using active control, which is symbolically marked in the figure below as a dashed line rectangle. The operation of bearings is also influenced by the dynamic properties of the supporting structure [18], the materials used for the seals and bearing [19,20].

Changes in bearing geometry affect changes in their characteristics, including changes in stiffness and damping coefficients [22–25]. Changing the characteristics of bearings by modifying their geometry is one of the most common ways of designing active bearings. A summary of various methods of identifying dynamic coefficients of bearings was presented in 2007 by T. W. Diamond et al. in paper [26]. The description of bearings is often complicated by non-linear phenomena brought about by various causes such as clearances in bearings, squeeze-film dampers, oil films in journal bearings, magnetic forces, seals, frictions and stiffening effect in elongation of a shaft centerline. Y. Ishida [28] demonstrated how non-linear phenomena affect rotor dynamics. Vibrations transmitted to bearings can also be influenced by such factors as unbalance [29,30], misalignment [31], rotor fractures [32] or material fatigue [33]. Y. Wei et al. [34] demonstrated that manufacturing accuracy is a crucial factor for bearings. All these factors not only influence the level of vibrations but also the noise generated [35,36].

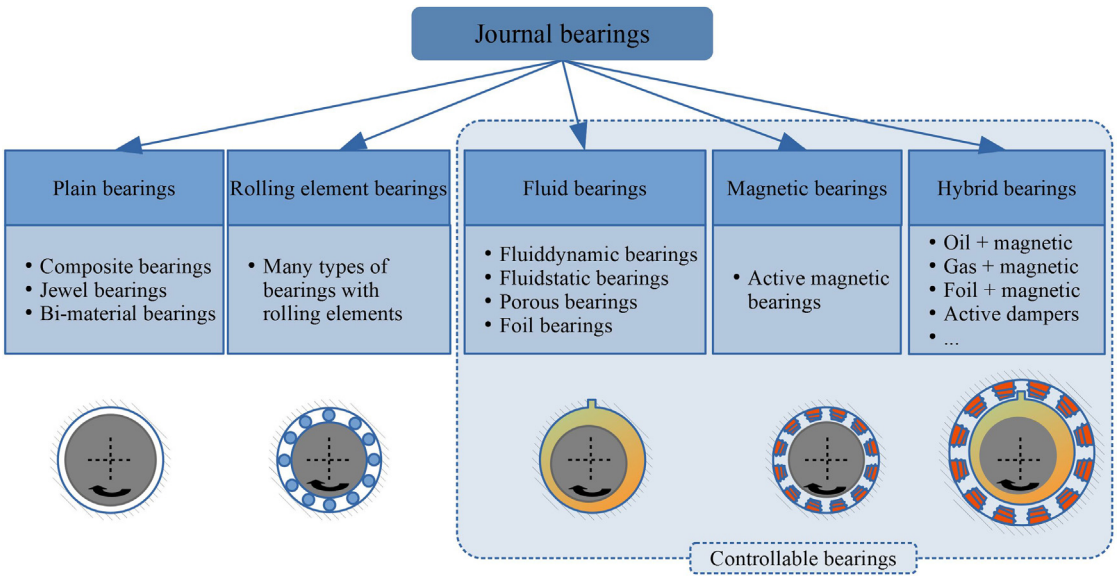

Fig. 1. Division of radial bearings.

2. Active control bearings

The combination of different types of bearings, e.g. hydrostatic and hydrodynamic [39] bearings or hydrodynamic bearings with an additional permanent magnet [40,41], is not enough to produce an active bearing, but such a combination can have a positive effect on the performance of the bearing. Active bearings in accordance with the concepts assumed in this paper are those whose parameters can be changed during their operation.

The bearings known and widely used for decades can be described as traditional bearing technologies. These technologies have seen stable development in recent years. The constant increase in requirements for new machine constructions is related to operational safety, reduction of friction losses, improvement of reliability, weight reduction as well as reduction of vibrations and noise. This often requires the limitations of conventional bearing methods [42] to be exceeded. This provides a possibility to combine tribology, mechanics, automation and computer science (mechatronics), allowing for the development of active bearings, which in addition to providing stable support are characterized by a number of positive features. I. F. Santos [43] stated that the synergistic connection between different fields of science makes it possible to find a balance between the various contradictory properties of the traditional "passive" bearing design.

Active vibration control is a relatively novel issue with more and more research [44], doctoral theses [45–47] and scientific articles on the matter. The development of new machine elements to maintain low vibration levels is fundamental [48]. Active control is used in various branches of industry.

Fig. 2 shows a diagram of a rotor supported on two transverse active bearings. The characteristic feature of this type of bearings are most often sensors enabling measurement of rotor trajectory, a mechanism enabling changes of bearings, and a controller steering the appropriate changes. An example of active control of a rotor and transmission can be the tests started by D. A. Bies in 1968 [49]. Vibration control, understood as self-optimizing support, is shown in the paper by Y. Iwata and K. Nonami [50]. The authors summarize the work with the statement that variable support stiffness (which depends on the rotational speed) can have a positive effect on the level of vibrations in the system. The article closes with a summary that for rotating machinery operating at a wide range of speeds, including subcritical and supercritical speeds, suitable self-optimizing support can ensure minimum level of vibration and thus stable operation. Similar conclusions can also be found in many articles devoted to the research of rotor systems, e.g. in papers by Y. A. Khulief [51] and B. H. Rho and K. W. Kim [52].

P. E. Allaire et al. [53] stated that if support is susceptible, this must be taken into account along with the bearing stiffness to achieve the desired vibration amplitudes. Active control of non-stationary (transient) rotor vibrations was described by A. B. Palazzolo et al. in 1989 [54]. They described active vibration control in dynamics of rotors in transient states, stating that many papers describe steady-state vibrations very well. An example of transient vibration can be the sudden appearance of unbalance, e.g. caused by a broken blade. The authors demonstrated that significant reduction of vibrations is possible.

3. Fluid bearings

Hydrodynamic bearings are commonly used in technical equipment such as compressors, turbines and generators. Hydrodynamic bearings have been developed for more than 155 years, and one of the first examples of this type of bearings

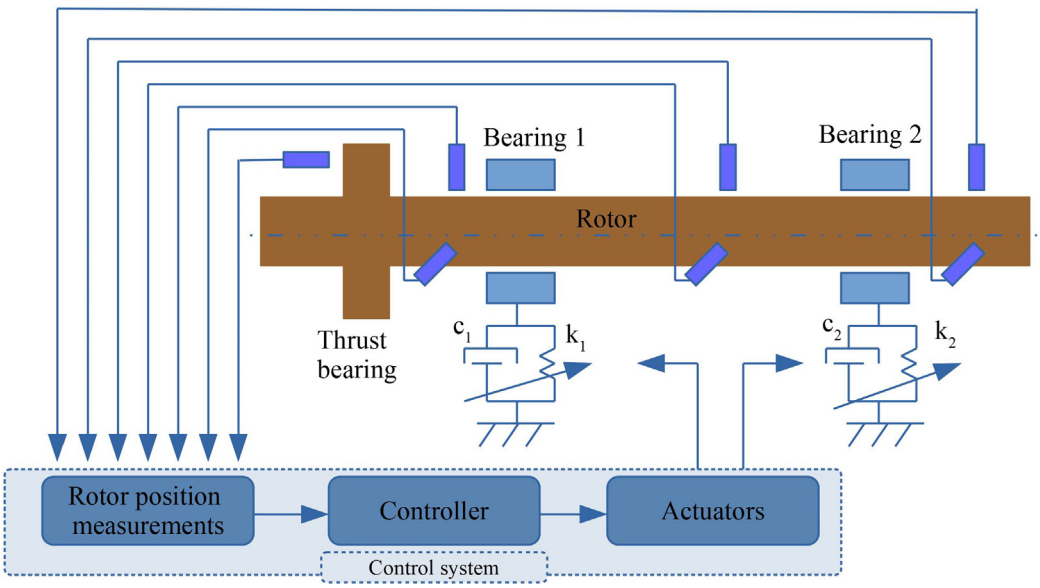

Fig. 2. Rotor with two controllable transverse bearings.

is a patent obtained by L. D. Girard [55–57]. It is assumed that in 1886 Osborne Reynolds invented the hydrodynamic bearing and described it in an article [58], which later became the basis for B. Tower's experimental research. In the following years work on fluid bearings was continued by A. Kingsbury, among others, who after reading Reynolds' article, published his findings demonstrating that the process of hydrodynamic lubrication was extended to compressible fluids. The development of bearing technology was also influenced by A. Michell, who invented a bearing with movable pads [59]. Ever since the initiation of research related to hydrodynamic bearings, a number of papers were published describing their operation and design, which made the construction of rotating machines working with increasing speed, efficiency and stability possible [60].

The fluid bearings category includes hydrodynamic bearings as well as hydrostatic bearings. In hydrodynamic bearings, a lubricating film is formed between the journal and the bearing sleeves. In hydrostatic bearings, the fluid is fed under the pressure necessary to separate the cooperating surfaces by lifting the shaft. This is usually done by an external pressure pump. S. A. Morsi [61] stated that in most cases the pressure is kept constant. I. F. Santos and F. Y. Watanabe stated that regulating this pressure can have a positive effect on the dynamic properties of the rotors [62].

3.1. Hydrodynamic bearings

The load in plain bearings is transferred from the journal, i.e. the rotating part of the bearing, to the bearing sleeves [63]. As a result of the relative movement of the two sliding surfaces and the adequately shaped (convergent) lubrication gap between the journal and the bearing sleeves, a lubrication wedge is formed. The lubricating wedge is formed by the supply of grease (oil, water, smart electrorheological or magnetorheological fluids [64–68]) to the lubrication gap which tapers at the bottom of the bearing. A schematic view of the hydrodynamic bearing is shown in Fig. 3. The lubrication gap is designed to separate the surfaces of the bearing components in order to prevent seizure of the bearing [58,69,70]. The hydrodynamic pressure is created by the flow of lubricant through the gap and occurs at a sufficiently large speed difference between adjacent surfaces. [71]. In a properly functioning bearing, it is necessary to take into account the conservation of mass equation for the incompressible fluid (4.1):

$$\frac{\partial u}{\partial x}+\frac{\partial v}{\partial y}+\frac{\partial w}{\partial z}=0, \tag{4.1}$$

where:

u, v and w are the speed components in the x, y and z directions.

Typically, flow phenomena in hydrodynamic bearings can be described by the Reynolds equation (RE) (4.2). The right side of this equation is the sum of two components: the first component is the sliding velocity, which can be substituted by bearing stiffness coefficients; the second component is the lubricating film velocity, which can be substituted by damping coefficients. The left side of the equation (4.2) contains components related to pressure. In this form, RE is expressed in units of speed.

$$\frac{\partial}{\partial x}\left[\frac{h^3}{\mu}\left(\frac{\partial p}{\partial x}\right)\right]+\frac{\partial}{\partial z}\left[\frac{h^3}{\mu}\left(\frac{\partial p}{\partial z}\right)\right]=6U\frac{dh}{dx}+12\frac{dh}{\partial t}, \tag{4.2}$$

where

P = p(x,z) — distribution of the lubricating film pressure,

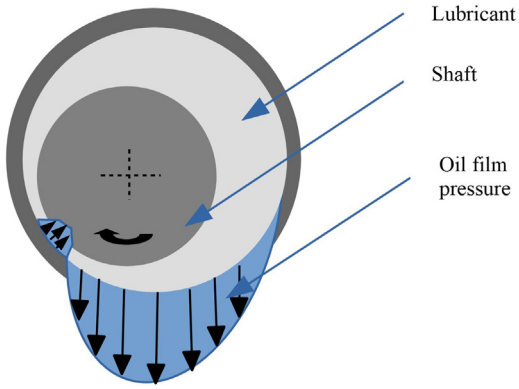

Fig. 3. Diagram of a hydrodynamic bearing.

h = h(x,z) — distribution of the lubricating film thickness.
U — film-sliding velocities

RE is derived from the Navier-Stokes equations. For these equations, there is no rigorous proof of the existence of unique solutions [72]. The RE equation is considered to be the theoretical basis for the operation of hydrodynamic radial bearings. It also provides a theoretical basis for the operation of hydrostatic bearings, which were only invented in the mid-20th century, while O. Reynolds published his article in 1886 [73]. As the general Reynolds equation is usually difficult to solve, it can be modified in various ways and simplified to allow for analysis of specific bearings. In numerical calculations, the beginnings and ends of pads are treated as boundary conditions. This is further complicated by the fact that the dynamics of bearings are influenced by such factors as the shape of pads and their rigidity [74], oil supply pressure and additional thermal effects [75].

The main advantage of hydrodynamic bearings is that they are capable of carrying very high loads [76,77]. They operate reliably at high operating speeds, [52,78] reduce transverse rotor vibrations and, due to their susceptibility, can reduce the forces transmitted between the rotor and its housing [79]. Hydrodynamic bearings are subject to power losses due to friction and vibration. The disadvantage of hydrodynamic bearings is the occurrence of phenomena called oil whirl and oil whip [80]. We observe oil whirls in vibration signals in the frequency domain as sub-harmonic vibrations [81,82]. The inability to create a hydrodynamic lubricating layer when starting and stopping the machine or when operating it at low speed are other disadvantages [83,84].

Bearings divided into three (three-lobe bearings) or more pads (multi-lobe bearings) and those with offset bearing caps often have better dynamic properties. They have been the subject of a number of studies, such as an article by M. K. Ghosh et al. [85–87].

3.2. Hydrostatic bearings

The principle of operation of the hydrostatic bearing is such that the flow of liquid is directed through the supply holes to the rotating shaft. Fig. 4 presents a close-up of one of the supply holes with supply chamber at the end. The flow of the liquid is generated by the pump. The shaft is lifted by the sufficiently pressurized flow [88]. A description of the basics of hydrostatic, aerostatic and hybrid bearings can be found, for example in a book by B. W. Rowe [89].

The most important advantages of hydrostatic bearings include the possibility of carrying heavy loads and lack of slip effect due to smooth friction. These bearings are characterized by high damping [90,91]. Their advantages also include long service life and high rigidity. The main disadvantage of hydrostatic bearings is the high cost of installation due to the price of the pressure pump. It is also necessary to filter the fluids.

In hydrostatic bearings, we deal with the following operating parameters: load capacity (4.6) requirements and power of the pump (4.4) and the required supply flow (4.5). These parameters can be determined using the following relationships:

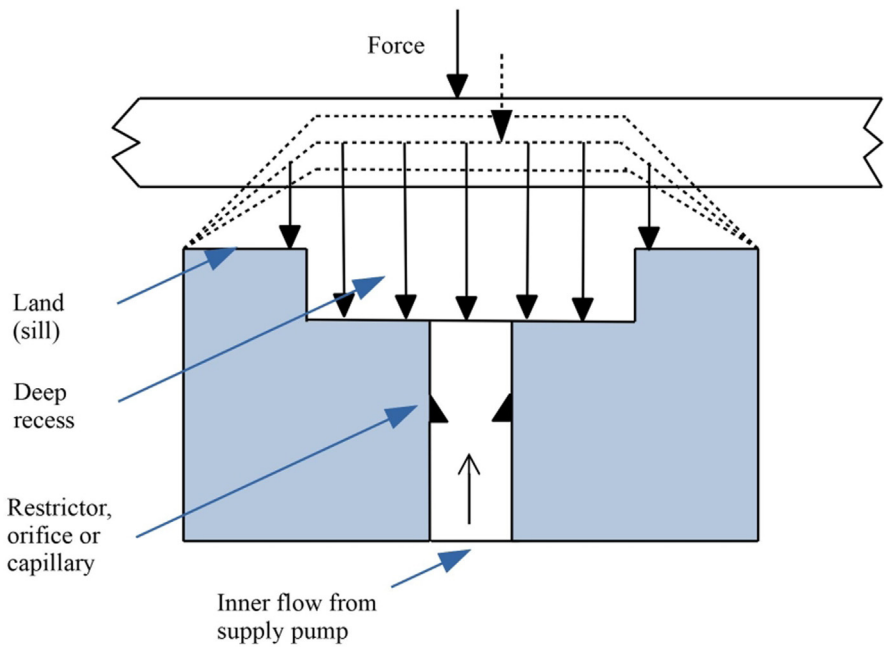

Fig. 4. Diagram of a hydrostatic bearing.

$$W = a_f A_p p_r, \tag{4.3}$$

$$H_B = p_r Q = H_f \left(\frac{W}{A_p}\right)^2 \frac{h^3}{\mu}, \tag{4.4}$$

$$Q = q_f \left(\frac{W}{A_p}\right) \frac{h^3}{\mu}, \tag{4.5}$$

where

p_r — recess pressure,
A_p — pad area,
W — load,
h — recess depth is 0.025 – 0.127 mm,
a_f — pad-load coefficient,
q_f — pad-flow coefficient,
H_f — pad-power coefficient.

3.3. Application

Hydrodynamic bearings are used, for example in steam turbines, electric motors and cooling pumps [77,92–97]. There are works in progress to extend the scope of their application, e.g. K. Bobzion et al. presented an article describing the use of bearings in wind power plants which require frequent starts and stops [98].

Hydrodynamic bearings are also used in Hard Disk Drives [99,100] where they replaced ball bearings [101–103]. Hydrodynamic bearings in these systems are used due to the improvement of dynamics and stability in relation to previously used ball bearings. J. Y. Yuang et al. presented an article [104] in which a nano-actuator was used in hard disk drives to control the height of sliding surfaces. The authors emphasized that after applying proper control, the dynamic properties were improved by minimizing the adhesive forces at the nanoscale. Based on numerical calculations, the authors have determined the static and dynamic properties of the system.

Hydrostatic bearings are used in machine tools, large radio antennas or radar telescopes [88] because of the precision of setting high loads with slow sliding. These bearings are used in sea-faring vessels and more precisely in shaft-less rim driven thrusters [68]. Active hydrostatic bearings can be used as guides for flexible structures [90]. These bearings are also used in turbopumps due to their low friction coefficient and long service life [105].

In some cases, the division between liquid and gaseous bearings becomes "blurred". In the case of liquid propellent gases (such as liquid oxygen), bearings are lubricated near the critical point. Such bearings [68] are highly likely to have two-phase lubrication zones. An example of hybrid bearings designed for an advanced cryogenic rocket turbopump engine was presented by Z. Guoyuan and Y. Xiu-Tian [106].

3.4. Different methods of adjustment

With the development of science, further control systems for fluid bearings were created. The control of a fluid bearing is usually carried out by changing the distance of bearing pads from the rotor's axis of rotation, their angle of inclination or by controlling the pressure of the oil supplying the bearing. Hydrostatic bearings are usually controlled by changing the supply pressure during operation. Other control methods are implemented by combining these bearings with other types of bearings [107]. Hydrostatic and hydrodynamic bearings can be lubricated using smart fluids, which consist of microparticles dispersed in the fluid (the carrier), their rheological properties change in a reversible and rapid manner. This is done using a magnetic or electric field. In the literature [108–110], in order to eliminate undesirable vibrations of the rotor- bearings system, a solution based on changing the geometry of bearings during operation is also proposed. The variable geometry is obtained using time-dependent deformations. In this case, the numerical research shows that higher allowable rotational speeds of the rotating system with elastic bearings can be achieved without the occurrence of phenomena indicating unstable operation of the hydrodynamic bearings such as "oil- whirl" and "oil- whip".

One of the ways of adjustment was presented by H. Ulbrich and J. Althaus in 1989 [111]. The system damping is increased by active control of the preset bearings at the right moments [79]. To control by changing the position of the pads it is necessary to use appropriate actuators, as presented for instance, in a paper by C. Carmignani et al. [112].

One of the concepts of hydrodynamic bearing equipped with tilting pads was presented by A. H. Marcinkevičius [113]. It is based on articulated pins, whose distance from the journal is adjustable. In the literature there is a different number of tilting pads used to adjust the hydrodynamic bearing, most often this number ranges from two to four [114–118].

Some example articles related to the construction of an active bearing were presented by J. M. Krodkiewski et al. in their papers [119,120]. The design of the bearings they analyze is based on multi-factor adaptive self-tuning control. A self-adjusting controller was used so that an adaptive check for induced vibration could be performed. A flexible sleeve was used

in the discussed bearing, which acted as an active part of the bearing, activated by pressure. The oil film in the bearing is separated from the pressure chamber by a flexible sealant (Fig. 5 a). This means that the pressure in the chamber does not affect the boundary conditions of the oil film. The tests assumed a chamber pressure of 0.1 MPa and rotor speed of 3000 rpm.

J. M. Krodkiewski and G. J. Davies carried on the previous works, which resulted in the creation of a bearing in 2004 with not only one but three controllable parts (Fig. 5 b) [116]. Each of the pads was assigned a specific action, one of them acted as a passive device (mounted at the bottom of the bearing) and the other two pads were equipped with oil chambers. Two pads were placed in the upper part of the hydrodynamic bearing and used as a means of controlling it. The input pressure of the lubricant was controlled while the bearing was running so that it could dissipate a large amount of energy and operate under heavy load. This bearing was controlled by adjusting the input pressure of the lubricant, which depended on the rotor speed and position.

A. H. Marcinkevičius in his article [113] from 2010 described the application of three tilting pads, each of which was supported in the radial direction by a pin (Fig. 6). The system was also equipped with a transducer whose task was to measure the deviation occurring in the direction perpendicular to the pin axis and the signal coming out of the transducer was used to control the tested bearing. There are also two other pins in this bearing, one is mounted in a sleeve and the other is automatically controlled so that the hydrodynamic force applied to the pads can be controlled. This force is controlled by adjusting the clearance between the rotating journal (3000 rpm) and the tilting pad. The control of the clearance also allows for checking the amount of heat produced and energy losses in the bearing. The advantage of this bearing is that it can be used in the spindle of a cylindrical grinder or other machine tools, in which case the radial cutting force can be measured. This value is obtained as the difference between the originally set hydrodynamic force and its change during cutting.

D. C. De Moraes and R. Nicoletti presented the use of four regulated pads in their article [121], published in 2010. The adjustment was made in pairs, in two perpendicular directions. In order to set the pad pitch, electromagnetic actuators were used, one for each pad (Fig. 7). In addition, the pads and actuators are immersed in oil. A proportional-derivative (PD) controller was used. By using a controller, it was possible to reduce the rotor vibration amplitude by 56% at a speed of 300 rpm (compared to a system without a controller). As the speed increased, the vibration amplitude decreased, e.g. for 1200 rpm the amplitude was 9% lower (compared to a system without control).

In 2006, A. Chasalevris and F. Dohnal [114] presented a bearing with two (Fig. 8 a) and three (Fig. 8 b) adjustable pads. In the case of a bearing with two pads, the pads of the same length are placed opposite each other (at the top and bottom of the bearing) and in the case of three pads, there are two pads of equal length at the top of the bearing and the third pad is placed at the bottom of the bearing and its length is greater than that of the other two. The pressure at the ends of the pads is equal, with actuators placed at each pad. The proposed solution is based on changes in stiffness and damping at a specific frequency and amplitude, which should result in anti- resonance. According to the authors' intention, this solution is based on the expansion of the range of speeds at which the stable operation of the turbine rotors is ensured (up to 45,000 rpm). According to the authors' opinion, this solution also allows for the correction of the shaft line alignment during the operation of the system, both in vertical and horizontal plane. This allows for optimal operation of the loaded shaft in the event of thermal deformations.

A. Chasalevris and F. Dohnal proposed another journal bearing concept to improve the operational stability. In papers [122,123], the authors presented the concept of a variable geometry journal bearing (VGJB) that was used in a large rotor-bearings system whose operation was tested over a wide range of speeds. The proposed concept allows for the reduction of vibrations during passing' through resonance thanks to the possibility of changing the thickness of the lubricating film. The thickness of the lubricating film can be higher when the journal is located in the lower part of the bearing sleeve.

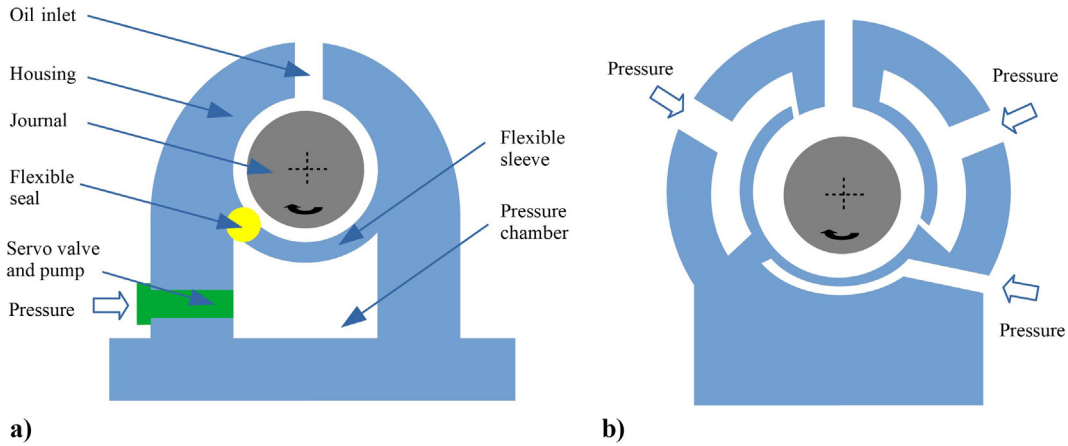

Fig. 5. a) Hydrodynamic bearing with a flexible sleeve. b) Bearing with three chambers. Figure based on [119] and [116] respectively.

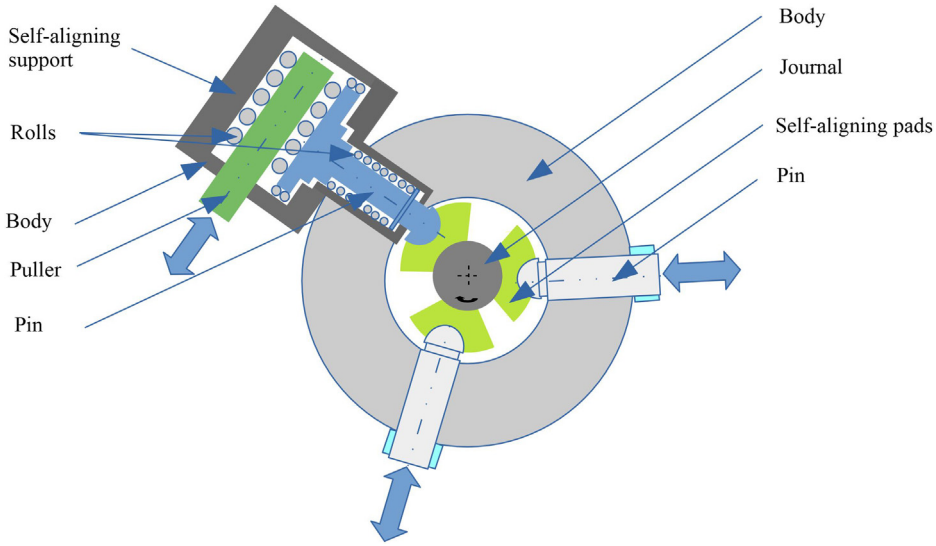

Fig. 6. Bearing diagram based on [113].

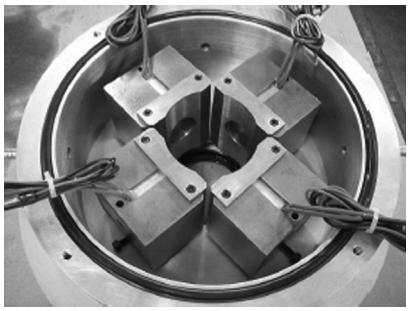

Fig. 7. Hydrodynamic bearing with four tilting pads, which are equipped with electromagnetic actuators [121].

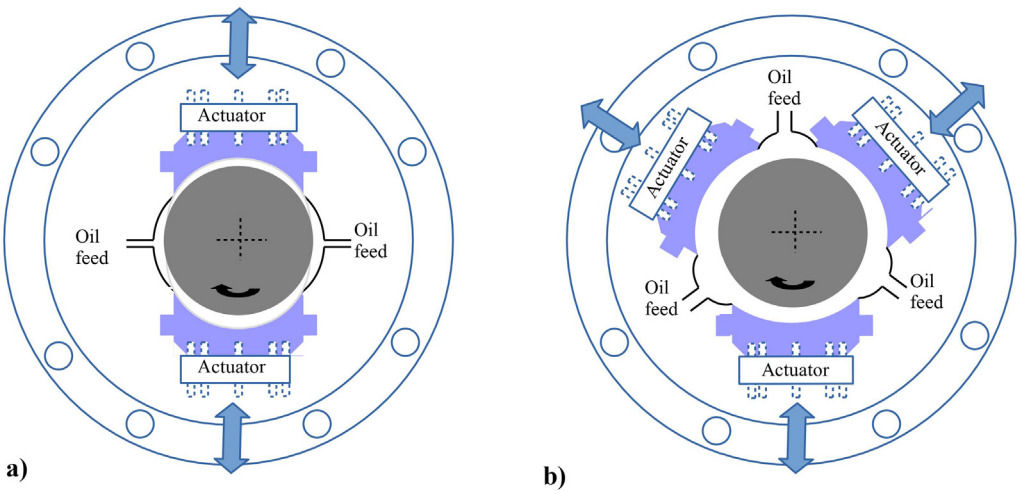

Fig. 8. Bearing with a) two, b) three adjustable pads. Figure based on [114].

According to this concept, the bearing is passive, which means that changes in the shape of the lubricating film are possible only if the film forces the exceedance of the well-defined preload of the external spring. The solution presented allows for almost a 40% reduction in the vibration amplitude during passing through the critical speed. In another article by A. Chasalevris and F. Dohnal from 2016 [124], the authors showed modal interaction and vibration suppression in industrial turbines using controllable journal bearings.

The control of bearings by adjusting the position of individual pads is subject to constant development. In 2018, R. Pai and D. W. Parkins [115] presented an article in which they used pad position adjustment to control radial clearance and lubricating film thickness. The control process used between three and five externally adjustable bearing elements and four tilt pads were placed around the journal. In addition, chambers with individual oil supply were installed. The larger inclination angle of the pads increases the radial stiffness, which can be controlled in this way. A bearing designed in this way has a smaller surface area and a smaller oil input and output temperature difference than conventional bearings.

For the control of the injection pressure, the most commonly used are servo valves [125] mounted in the bearing. I. F. Santos and A. Scalabrin [126] presented a paper showing an active hydrodynamic bearing with active oil injection. A part of the test stand was a rotor combined with an actively lubricated bearing. Four tilting pads were mounted inside the bearing, perpendicular to each other. These pads have from five to fifteen holes. They are made up of two parts attached to each other by means of bolts, thus forming a tank filled with oil supplied under pressure. The lubricating oil is supplied from the servo valves and is controlled by means of feedback, which uses the speed and displacement signals.

P. Ferfecki and J. Zapoměl [79] presented a study on a design based on controlled kinematic excitation of bearing supports (Fig. 9). Bearing sleeves movement depended on the current position and relative speed of the journal supported on two hydrodynamic bearings.

In addition to the above-mentioned control methods, the control of the hydrodynamic bearing operation can be carried out by means of actuators. An example of such control was presented by C. Carmignani et al. in 2001 [112]. The article presents a bearing with a movable housing mounted on piezoelectric actuators (Fig. 10). This bearing is designed to reduce the

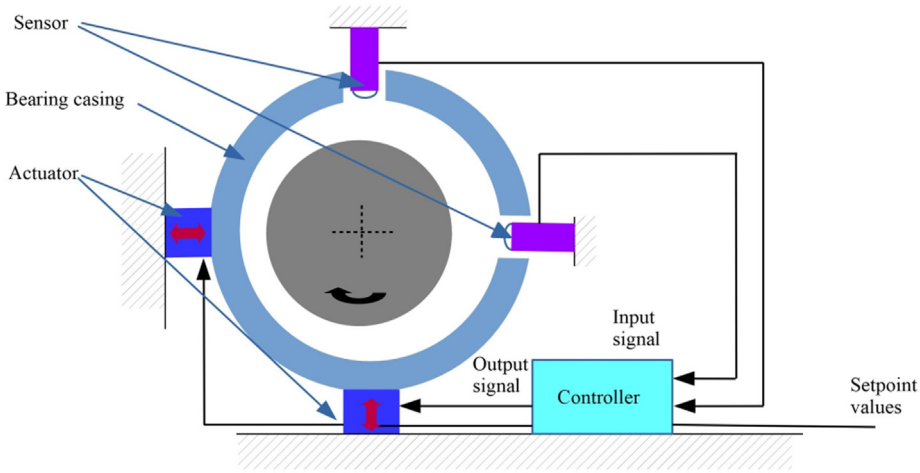

Fig. 9. Diagram of a bearing with a PD controller. Figure based on [79].

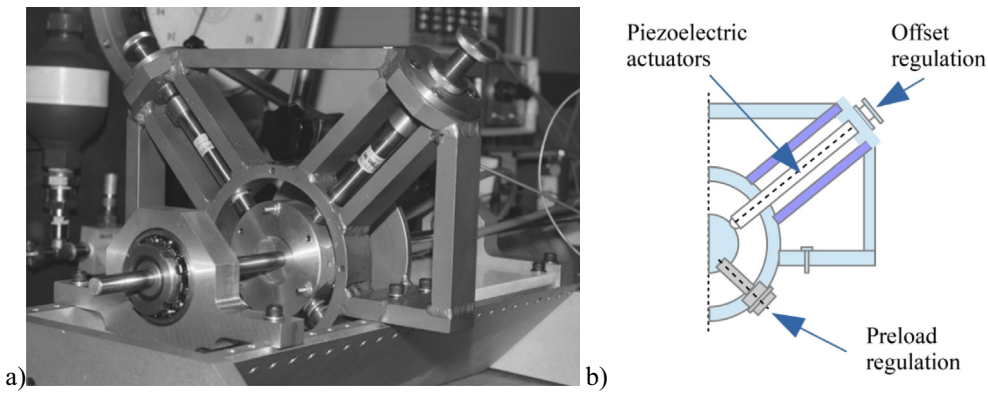

Fig. 10. a) photograph of a bearing control system [112], b) diagram of active bearing control based on [112].

vibration amplitude of a statically unbalanced flexible rotor. This bearing is equipped with two piezoelectric actuators, which are positioned at a 90-degree angle to the axis of the shaft. These actuators are designed to move the movable bearing housing. This bearing is not suitable for use at low eccentricity ratios, but for it to operate at low speeds it has to be equipped with a tilting pad. The actuators used only work by expanding, which required the installation of reaction springs, whose load and position are adjustable.

In 2013, M. De Qeiroz [127] presented a paper describing the conversion of a passive bearing into an active one. According to the author, this can be achieved by using sensors and actuators. Other papers on active hydrodynamic bearings are related to, for example, control by means of pressure of the injected lubricant [128,129]. The principle of operation of the presented bearing is based on the average velocity of Couette flow occurring in the fluid layer in order to control the instability caused by the flow. The new design is equipped with a motor-controlled rotating sleeve to control the journal vibration. The sleeve speed is the parameter forming the basis for the control process. It is used to change the average fluid flow velocity and is set by applying the feedback control law. The best results were obtained when operating under light loads. This bearing allowed for the reduction of the average flow rate due to the fact that the expansion of the sleeve was made in the opposite direction to the rotation of the journal.

In 2010, D. E. Bently et al. [130] presented a paper in which they described the control method and experimental results of a hydrostatic bearing. The authors emphasized that it performed not only traditional functions such as supporting the loaded rotor, vibration damping, heat dissipation, but also enabled active control of machine dynamics. The authors maintain that the introduction of active control results in rotor machines with better dynamic properties. The changes in the bearing concerned the improvement of efficiency, permissible operating time, damage diagnosis and reduction of dimensions, weight and costs. The authors proposed to use hydrostatic bearings instead of traditional hydrodynamic bearings. It enables the replacement of traditional lubricants with more environmentally friendly fluids. The authors also compared the new controllable hydrostatic bearing with the active magnetic bearing. The principle of operation of the new bearing is based on fluid restoring forces, enabling static and dynamic motion control similar to that used in magnetic bearings, but at much greater compensation forces and with stiffness control. Bearing control was based on current rotor vibrations.

B. H. Rho and K. W. Kim [52] presented theoretical studies on a hydrodynamic bearing control with an axial groove. Such bearings are characterized by self-excited instability. A PD controller was used to control the bearing. The simulation proved that vibrations and instability in two bearings can be subjected to damping by using active control of the center position of the hydrodynamic bearing.

S. Zhang et al. [131] showed an experimental study on vibration suppression of adjustable elliptical journal bearing-rotor system in various vibration states. The vibration suppression behavior of the bearing-rotor system in various vibration states was studied experimentally.

P. Kytka et al. [90] focused their attention on active hydrostatic bearings. This study was aimed at achieving the vibration damping of the structure. Two test stands were created for this purpose. The main element of the first test stand was the mass supported hydrostatically and the second — a flexible beam, which was hydrostatically supported by two active bearings. This second test stand is particularly interesting from the point of view of active bearing control.

A paper by M. C. Shih and J. S. Shie [132] presents a theoretical study of an active hydrostatic bearing with a servo valve and a controller allowing for dynamic control thickness of the oil film. The authors propose to use a self-tuning fuzzy controller to change the output scaling factor and add a dead zone compensator, this zone is used to eliminate the insensitive area of the servo valve. The bearing shown has a square design with a recess.

3.5. Control using ferrofluids

One way to control fluid bearings is to use a ferrofluid to obtain specific bearing properties [133]. Ferrofluids consist of three basic components: a base liquid, ferromagnetic particles and a coating on each particle [134]. Ferrofluids are an interesting group of liquids because they have the properties of a liquid and act as ferromagnetic materials. Many of the properties of ferrofluids are similar to those of the base liquid. Since the concentration of magnetic particles is low (3–10%), it does not have a significant effect on either the density, vapor pressure and pour point or the chemical properties of the liquid, but is associated with an increase in the viscosity of the ferrofluid compared to the viscosity of the base liquid [135]. Pioneering studies on bearing lubrication with ferrofluids were presented by Kuzma (1963), Neuringer and Rosenweig (1964), Shiliomis (1972), Jenkins (1972) and Tarapov (1972) [136].

Lubrication of bearings with ferrofluids was the subject of articles written by Tipei (1982), Sorge (1987) and Zhang (1991) [136]. In order to calculate such bearings, a modified Reynolds equation extended by a part related to electromagnetic effects is most commonly used. Such assumptions are adopted, for example, in a paper by N. Tipei [137]. In a paper published in 2001 [133] T.A. Osman et al. made the assumption that the pressure limits are not fixed. For this reason, the equation describing the magnetic effect could not be separated from the hydrodynamic equation, as was the case in N. Tipei's paper. The equations found in paper [133] are presented below. For a ferrofluid under the influence of a magnetic field, assuming isothermal conditions and linear behavior of the ferrofluid, the unit volume of the induced magnetic force is described by the formula (4.6):

$$f_m = \mu_0 \cdot X_m \cdot h_m \cdot gradh_m, \tag{4.6}$$

where

μ_0 — permeability of free space or air (mo = 4p·10^{-7} AT/m),
X_m — susceptibility to ferrofluid,
hm — magnetic field intensity.

Starting with the basic Navier-Stokes equation and assuming that magnetic forces are external body forces, the film motion equation can be expressed using equations (4.7) and (4.8):

$$-\frac{\partial p}{\partial x}+\eta\frac{\partial^2 v_x}{\partial^2}+f_{mx}=0 \tag{4.7}$$

$$-\frac{\partial p}{\partial z}+\eta\frac{\partial^2 v_z}{\partial^2}+f_{mz}=0, \tag{4.8}$$

where

f_{mx}, f_{mz} — magnetic force components in the peripheral and radial direction respectively.

Another type of bearings lubricated with ferrofluid was presented by N. S. Patel et al. [136]. A permanent magnet was used as a shaft. The authors obtained a film pressure with ferrofluid about 60% higher than that of conventional lubrication. In addition, the increase in bearing temperature was smaller for a bearing using ferrofluid, making the overall temperature of the entire system lower.

3.6. Advantages of active control

The advantage of active control is its ability to adapt to the conditions at any given moment (e.g. load changes, sudden unbalance or speed changes). Active control works on selected elements only when necessary, and has the additional advantage of increasing system damping [79,112]. In addition to these advantages, it is worth mentioning the possibility of adjusting the various stiffness levels of the working system according to the requirements resulting from the permissible vibration level of the machine. High forces can be generated in an actively controlled hydrodynamic bearing [126]. The use of an active bearing can improve the stability and load-carrying capacity of the bearing system, which can also be related to the reduction of losses and wear to the bearing. Active control also increases the tolerance to grease contamination and changes to its viscosity [138].

In 2017, J. G. Salazar [139,140] carried out an experiment aimed at comparing a conventional hydrostatic bearing with an active hydrostatic bearing (Fig. 11). The results of the simulations carried out are shown in Fig. 12 a). Fig. 13 compares the system response, registered at a speed of 2000 rpm, during its operation under the hybrid open-loop lubrication regime (at a pressure of 60/90 bar) with the system response during the operation under the conventional passive lubrication regime. The effectiveness of continuous feeding of oil, with the objective to improve the damping, is evident at a resonant frequency of

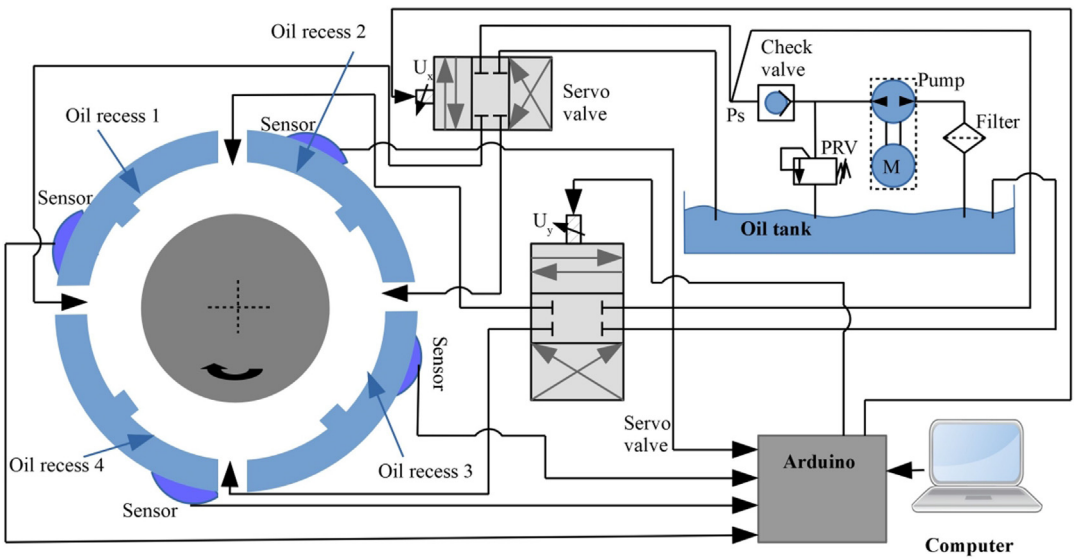

Fig. 11. Hydrostatic bearing model using a servo mechanism. Ps is a supply pressure of the servo valve, PRV is a type of pressure relief valve and used as a safety device, so that pressure cannot exceed from certain value. A detailed description of a similar like this model can be found in papers [78] and [140].

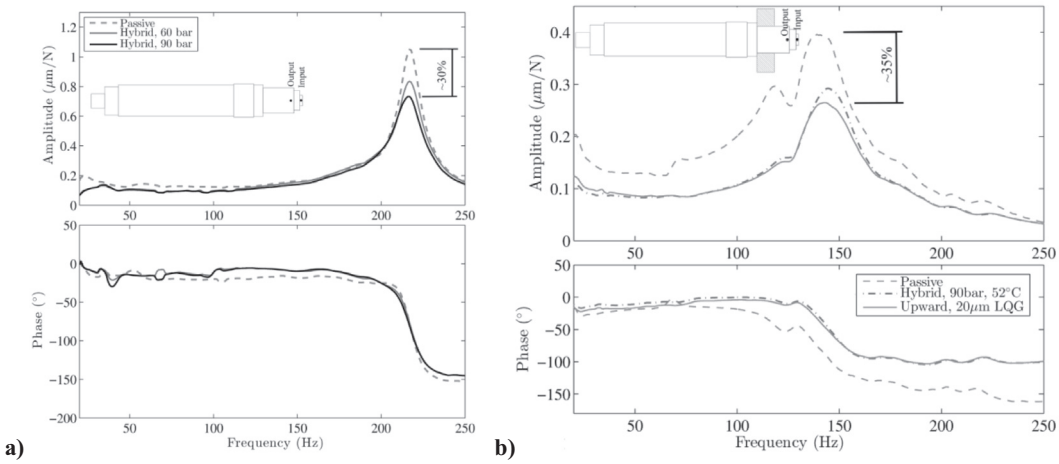

Fig. 12. a) Experimental FRFs (frequency response functions) in the horizontal direction. Rotor without disc. 2000 rpm. b) FRFs in the horizontal direction. System with one disc. 1000 rpm [139].

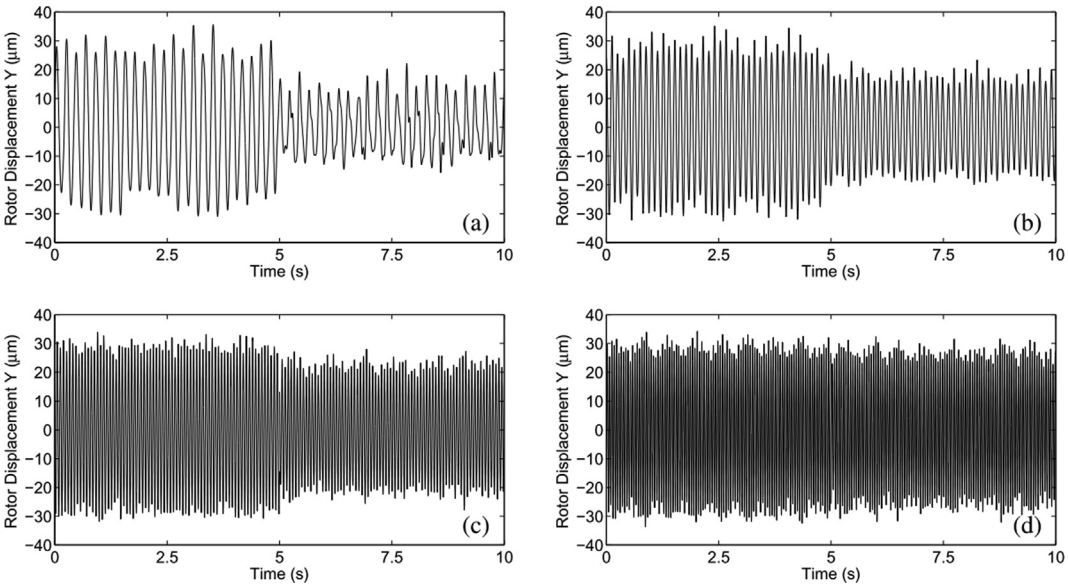

Fig. 13. Shaft unbalance response for the following speeds: a) 300 rpm b) 600 rpm c) 900 rpm d) 1200 rpm, where the PD controller activated after five seconds [121].

about 210 Hz. Additionally, the more significant reduction in the vibration level was observed when a higher supply pressure was used. Fig. 12 b) shows the results obtained in the horizontal direction during the operation at a speed of 1000 rpm. In this case, the system was loaded with one disc. During the test where an upward injection was used, the pressure was 90 bar. An upward injection scheme slightly changed the resonant speed compared to the hybrid case. It caused a significant reduction in the maximum vibration level compared to the case with passive vibration damping.

In 2010, D. C. De Moraes and R. Nicoletti [121] studied hydrodynamic bearings with electromagnetic actuators. Their paper presented a bearing with four tilting pads which was controlled by a PD controller. The system controller began operating after five seconds (Fig. 13) and simulations were performed for the following rotational speeds: 300, 600, 900 and 1200 rpm. For 300 rpm, a 54% reduction in transverse vibrations was obtained, and for 600 rpm, it decreased by only 38%. It was also concluded that control efficiency decreased as the speed increased (Fig. 13).

This chapter lists various types of active hydrodynamic and hydrostatic bearings. Their control algorithm is a separate matter. The applied control algorithm or controller has a great influence on the dynamic properties of the rotor operating using active bearings. Among the control methods mentioned in various papers are PD, PI (proportional-integral) and PID

(proportional-integral-derivative) controller, but one can also find, for example, the use of fuzzy logic (an example of its use was presented by W. U. R. Rehman et al. [78]) and other control methods.

4. Gas bearings (aerodynamic and aerostatic)

It can be said that gas bearings have been around for over 100 years. The concept of using air as a lubricant in a bearing was presented as early as 1854 by a Frenchman — G. Hirn. But this concept did not spark much interest at that time. More than 40 years later, in 1897, an American named Kingsbury built and tested a transverse bearing in which the shaft was completely suspended in the air. In 1913, an Englishman named Harrison published his first theory of air lubrication. Despite its presence in scientific publications, the gas bearing first found serious technical application at the end of World War II. Since the 1960s, gas bearings have been widely used in such devices as pumps, blowers or compressors operating in the nuclear power industry and chemical industry. Gas bearings are also used in turbine engines operating in temperatures of 500–800 °C with a rotational frequency of 500–1000 Hz. Gas bearings are also used in high-speed machine tools operating at frequencies from 2000 to 5000 Hz [117].

Gas bearings are widely used in rotaing micromachines, i.e. compressors, turbochargers or microturbines, which operate at very high speeds due to the need to improve performance [141]. Their small size, ability to operate at high temperatures, small amounts of heat generated and slight friction make the gas bearings highly efficient. During start-up and for some turbomachines, they perform better than oil-lubricated bearings [142].

4.1. Operating principle

Depending on how lift is achieved, gas bearings can be divided into aerostatic and aerodynamic bearings. Aerostatic bearings are essentially very similar to hydrostatic bearings. The only significant difference is the type of lubricating film used. In the case of aerostatic bearings, the gaseous lubricating film is treated as a compressible layer, in contrast to hydrostatic bearings, where the liquid forming the lubricating film is considered to be non-compressible.

In aerostatic bearings, the surfaces of the journal and bearing sleeves are separated from each other by a layer of pressurized gas. Adequate gas film pressure is usually provided by an external pump. The gas is supplied through a special hole with an appropriately adjustable cross-section. This solution allows for smooth friction regardless of the bearing operating conditions, even in situations such as system start-up or zero speed. The disadvantage of this type of solution is the complex design resulting from the necessity of using an external lubrication system.

In the case of aerodynamic bearings, a lubrication wedge balancing the load on the bearing is not caused by external components which are supposed to maintain the correct pressure of the lubricating film, but by the movement of the journal against the bearing sleeves. The pressure difference in the transverse plane of the bearing is caused by the continuous flow of lubricant (gas), through the space between the mating surfaces. In the case of aerodynamic bearings, obtaining liquid friction may prove problematic for shafts operating at low speeds under high load. The start-up phase may also be a hindrance to the operation of this type of bearing. The advantages of aerodynamic bearings undoubtedly include simple design and high load capacity. The lack of an external lubrication system has a positive effect on the price of this type of bearing.

One of the simplifications assumed by Reynolds in the RE equation for fluids (4.1), is that the lubricant is non-compressible. A twentieth-century direct offshoot of the original RE equation is the generalization to compressive fluids [88]. In this case, the form of the conservation of mass equation for non-compressive fluids has to change from the one given in equation (4.1) to the following (5.1):

$$\frac{\partial \rho}{\partial t}+\frac{\partial(\rho u)}{\partial x}+\frac{\partial(\rho v)}{\partial y}+\frac{\partial(\rho w)}{\partial z}=0, \tag{5.1}$$

where

ρ — fluid density,
u, v and w are the speed components in the x, y and z directions.

Applying equation (5.1) instead of equation (4.1) results in the following general RE equation (5.2) for compressible fluids:

$$\frac{\partial}{\partial x}\left[\frac{\rho h^3}{\mu}\left(\frac{\partial p}{\partial x}\right)\right]+\frac{\partial}{\partial z}\left[\frac{\rho h^3}{\mu}\left(\frac{\partial p}{\partial z}\right)\right]=6U\frac{\partial(\rho h)}{dx}+12\frac{\partial(\rho h)}{\partial t}, \tag{5.2}$$

For ideal gas, the Clapeyron equation is used:

$$p=\rho RT, \tag{5.3}$$

where

p — pressure,

R — universal gas constant,
T — absolute temperature.

An additional assumption for bearings is that the Knudsen number — Kn (ratio of the mean free path length λ between collisions of molecules to the percentage system length L) is small enough to treat gas as continuous. Condition Kn < 0.01 is considered a requirement (Khansari and Booser [143]).

4.2. General information

The great advantage of aerodynamic bearings is the lack of a complex and expensive lubrication system, which is necessary in case of hydrodynamic bearings. The lack of lubricating oil in the system eliminates the risk of contamination of the working medium [144,145]. Gas bearings have no negative impact on the environment, unlike oil-lubricated bearings, where leakage of lubricant can pollute the environment [146]. Another important feature of gas bearings is the ability to operate at high temperatures and at high speeds. As a result, they are widely used in low power turbomachinery, where high efficiency is of importance.

Despite their advantages, gas bearings also have some significant disadvantages. Due to the relatively low viscosity of the lubricant, they have a low vibration damping capacity [147,148]. This can cause an increased level of vibration, usually caused by unbalance and external interference, when the system is operating in the resonance frequency range [149]. Damping of the pneumatic hammer effect is the main problem undertaken in the context of regulating gas-lubricated bearings [150]. Pneumatic hammer effect is a characteristic phenomenon of bearing instability, resulting largely from the compressibility of air, which causes a delay between changes in bearing clearance and changes in pressure in the lubrication gap [151]. The way to control the undesired effect is to change the geometry, supply pressure and load of the bearing accordingly [152]. Another disadvantage of gas bearings, resulting from low viscosity of the lubricant, is their low load capacity [153].

Many scientists stress that foil bearings could be a good "direction of development" of traditional gas bearings. They can be used in high-speed gas turbines, which operate at very high temperatures. In contrast to susceptible bearings made of polymers or elastomers, foil-air bearings are made of flexible metal foil. As in the case of other gas bearings, the viscosity of air increases as the temperature rises, the opposite effect is observed in the case of traditional oil bearings [154]. Research on various designs of foil bearings has been underway for a number of years. They are being developed by organizations such as NASA, which is working on the development of anti-friction coatings, resistant to high temperatures. The application of these technologies is considered by the automotive industry in a variety of areas, e.g. turbochargers or fuel cell compressors [155].

4.3. Types of bearings and methods of control

The literature presents several concepts of active gas bearings, concerning both their design and control methods. We can divide this conteps into three catetories: by changing the geometry of the bearing; by means of an appropriate reduction in the lubricant air injection; hybrid method, combining the change of bearing geometry and the amount of injected air.

One of the solutions considered is a tilting pad gas bearing [156]. The main advantage of this type of design over conventional solutions is the improvement of dynamic parameters (e.g. damping coefficient), which results in improved stability of rotor systems under varied conditions [157]. A very small clearance in the bearing is necessary for this type of design, which requires high-precision manufacturing of its elements [158]. Ensuring such high precision is still a challenge that hinders the wider application of this type of active gas bearings [125].

One of the concepts of active gas bearing with tilting pads was presented by T. Kwon et al. [159]. The authors used three pads in the bearing, which were supported by movable joints (Fig. 14). The two joints are fitted with $5 \times 5 \times 10$ mm piezoelectric actuators, which generate a displacement of 6.1 μm at a set voltage of 200 V. In the described case, four piezoelectric actuators, arranged in pairs in different planes, were used. The authors introduced four eddy-current gap sensors, whose task was to determine the shaft displacement in the x and y directions.

As the shaft rotates, a gas layer forms between its surface and each pad, constituting a lubrication wedge. The shaft is supported in the radial direction by the pressure of the gas film. The pressure distribution of the gas layer depends on the position of the moving bearing pads relative to the shaft. The pressure distribution of the gas lubricant as well as the resultant force from this distribution can be controlled by repositioning the pads. The vibrations of the system can be actively dampened in a similar manner. The appropriate change of position of the moving pads can be achieved by applying voltage of an appropriate value to the piezoelectric actuators. The authors assumed that the interaction between the actuators can be omitted and each of the actuators can be controlled independently.

In the course of the described experiment, it turned out that two out of four actuators (described in [159] as LL and RR) were much less effective in controlling self-oscillations of the system. Therefore, fixed parameters of the control system (i.e. amplification K_p, K_i, K_d) were used for these actuators. In the case of actuators that showcased a greater influence on the control of vibrations, the parameters of the controller were changed so as to make it possible to check their influence on the quality of control.

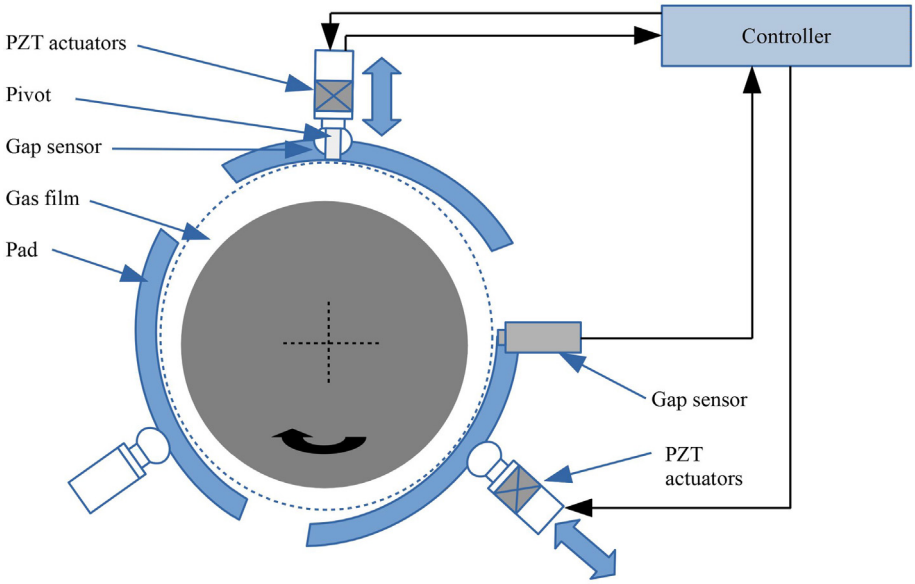

Fig. 14. Cross-section of a gas bearing with tilting pads. Figure based on [159].

The carried out research demonstrated that the application of appropriate PID controller parameters allows to significantly reduce the amplitude of asynchronous vibrations, which in the case of non-controllable systems increases significantly in the area of resonant frequencies. The studies did not prove the influence of control on the reduction of synchronous vibrations, the amplitude of which remained as high as in case of a system without control.

Among the many types of gas bearings, bearings with movable pads are particularly interesting as they maintain inherent rotor dynamic stability. These include problems such as the need for applying a number of very precise tolerances, the material consumption and multi-pad assemblies. One way to avoid these problems is a flexure pivot system adapted from fluid bearings. A slightly modified design of the active gas flexure pivot bearing was first presented by F.Y. Zeidan and D.J. Paquette [157], with D. Kim and K. Sim being the first to study the concept [160]. The active control of these bearings by means of pressure supply to the pads was presented, for example, by L. San Andres [161]. In this case, a flexure pivot tilting pad gas bearing or (FPTPGB) is designed as a one-piece component (Fig. 15). Each pad is connected to the bearing housing by thin, flexural web supports. This combination provides small values of the stiffness angles and also eliminates subsynchronous instabilities that occur during operation at very high speeds. The design of the FPTPGB also eliminates the problem of overlapping manufacturing tolerances of individual elements during machining and reduces pad wear. This type of bearing has four tilting pads. Pressurized air is fed to the central plane of each pad through holes in the elements connecting

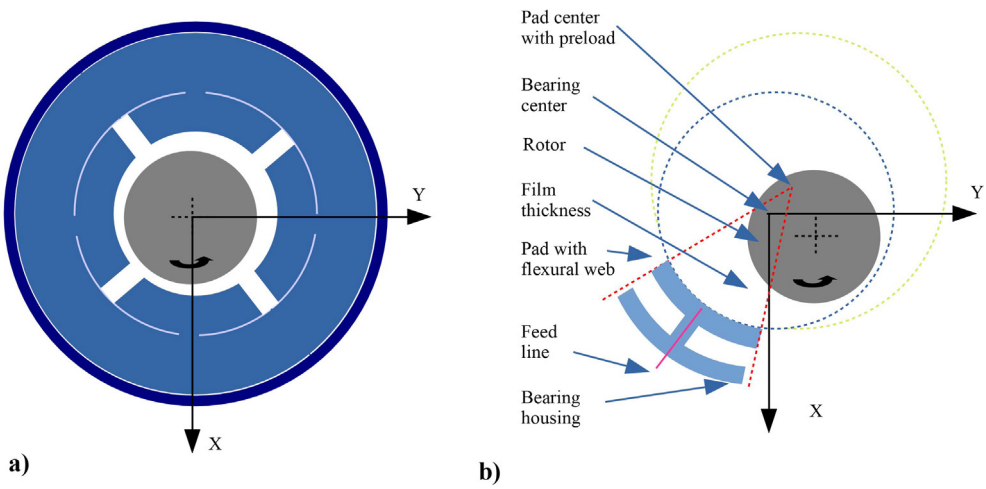

Fig. 15. a) Flexure pivot tilting pad gas bearing, b) geometry of the bearing. Figure based on [161].

the pads with the bearing housing. The system uses inductive sensors. Pairs of sensors located perpendicularly to the axis of the shaft at its opposite ends record movements of the shaft in radial directions (X and Y).

In his next publication, [149] L. San Andres presented further research on the control of tilting pad bearings. The proposed method involves adjusting the pressure of the air supply to the bearing. It aims to minimize the response of the rotor-bearing system when critical speeds are exceeded. The strategy is based on the use of an electropneumatic air controller acting on the control valve. In the presented tests, the controller in question operated in a closed control loop. Its task was to change the pressure of the air supplied to the central part of each of the moving bearing pads, depending on the rotor speed. The input value for the controller is the speed output signal obtained by the tachometer.

A completely different design of an active gas bearing was proposed in 1990 by O. Horikawa and A. Shimokohbe in paper [162] and O. Horikawa, K. Sato and A. Shimokohbe in paper [163]. The presented solution (Fig. 16) is one of the first in which gas bearings are actively controlled during operation. In this case, the shaft is supported without contact by means of air pads. The pads are connected to the bearing housing by means of elastic hinges, which allow movement in the x and y direction. Piezoelectric actuators (authors used abbreviation PEA) were used in the system. Actuators are placed between each washer and the bearing housing. The purpose of the actuators is to change the position of the shaft in the x and y direction without contact by means of supplying pressurized air.

Shaft displacement was measured in the x and y directions by capacitive micrometers. It was considered separately in both directions and the adjustment of the position of bearing elements was carried out independently in different directions. In the system, the authors additionally used a repetitive controller, which was to reduce periodic, repetitive errors in the position of the moving shaft [164]. Such errors are usually caused by periodic interference caused by external excitation or unbalance of the rotating shaft. The disadvantage of the repetitive controller is its low sensitivity to non-periodic or random signals [165].

Many of the available methods of active control of gas bearings are based on changing the pressure of the lubricating film by controlling the flow rate of the supplied lubricant [166,167]. The active change of pressure distribution in the bearing leads to a change in the thickness of the lubricating film, which can be used to dampen vibrations occurring during operation of the rotor-bearing system [168].

S. Morosi and I. F. Santos in article [169] and also S. Morsi in article [170] presented the design of a gas bearing in which they used an air injection system. In the analyzed concept (Fig. 17), four holes for the lubricant supply were located in the housing of the gas bearing. The authors distributed them evenly around the circumference of the bearing. The system was also equipped with four piezoelectric actuators, by means of which the appropriate air injection duct obstruction was regulated. The use of piezoelectric actuators has provided a more compact design and a faster response to a given signal than

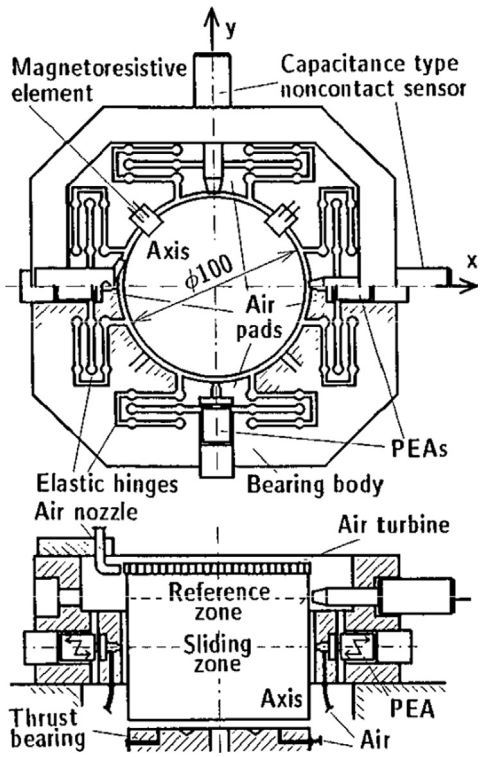

Fig. 16. Active gas bearing diagram according to [162].

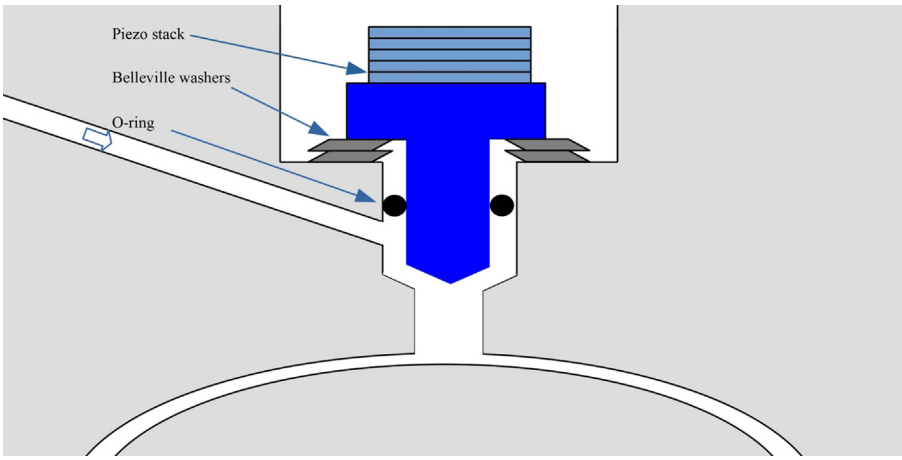

Fig. 17. Diagram of the air injection system. Figure based on [169].

with other types of actuators [37,171]. The ducts through which air was injected into the space between the bearing and the shaft were covered by pins which could move vertically due to a piezoelectric component after it received a signal of appropriate voltage. Between the bearing housing and the moving pin, Belleville washers were used to facilitate the retraction of the pin (Fig. 17). The degree to which each of the four holes responsible for lubricating air injection closed is controlled individually.

The research carried out by A. K. Sekunda et al. [172] presented theoretical and experimental determination of gas properties of piezoelectric-controlled radial bearings. The main purpose of the adjustment is to minimize the response of the system to inducement. This can be done by increasing the rigidity or damping. The system is controlled by a feedback loop. The output signal is a response in the form of an appropriate voltage transmitted to the piezoelectric components responsible for the movement of the lubricating air injection pins. The input signals for the control system are speed and shaft displacement. These values are measured by appropriate sensors. A PD controller is used in the control system. Its main task is to minimize the amplitude of the vibrations of the system.

A slightly different design, also based on lubricant injection control, was proposed by H. Mizumoto et al. [166]. In this case, the active control of a gas bearing was carried out by means of six piezoelectric stops with through-holes, evenly distributed around the circumference of the bearing. By controlling the stroke of the stop, the air pressure distribution could be tuned without interfering with the thickness of the lubricating film. Displacement was the input signal for the control system. The output signal for the actuator control system was determined using a PI controller. For each actuator, the displacement signal affecting the control is determined by the nearest sensor. This means that each actuator was controlled independently.

In the case of active gas bearings, which are controlled by means of air injection control, pneumatic valves are used in addition to various types of actuators. The main advantage of valve systems is their low price and ease of use. A simple system was patented by G. W. Russell [173] in 1994 (Fig. 18). The system uses a compressor to feed the air tank so that the

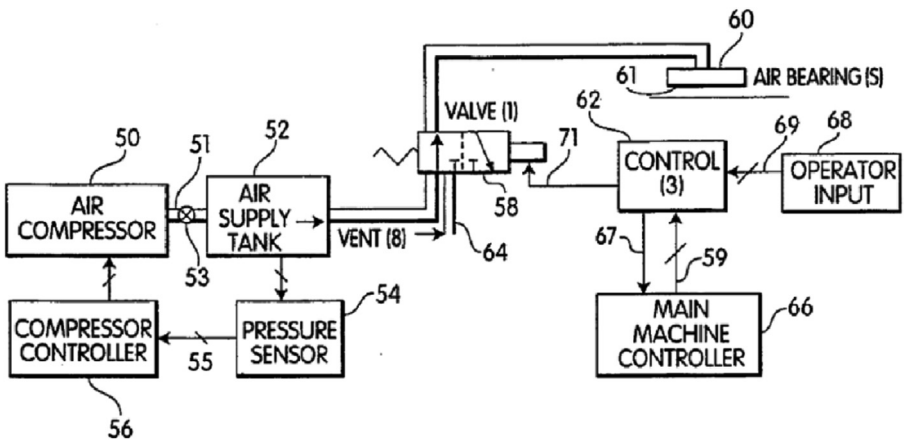

Fig. 18. Diagram of gas bearing air supply system [173].

pressure of the medium is kept at a value between the minimum and maximum (10 and 12 atm respectively). The supply air flows to the bearing through the valve.

Papers by G. Belforte and R. Relli [174] and T. Raparelli et al. [175] presented pneumatic valves, which were also used for active control of gas bearings in order to reduce the air gap. Four holes are arranged symmetrically around the circumference of the bearing. During active control, the top and bottom hole diameters change, while the side hole diameters remain unchanged.

The control system (Fig. 19) operates on the basis of the differential pressure between the reference value p_{ref} and the pressure measured with the bearing pressure transducer (p_s), on the upper and lower shaft surface ($p_{P,up}, p_{P,down}$). Based on the differential pressure ($p_{P,up} - p_{P,down}$), three membranes (1,2,3) connected to the movable body allow to controlling the output pressure by changing the resistance of the flow of the medium through the valve.

4.4. Benefits of active control

Active control of gas bearings has many advantages. With proper control, it is possible to improve the performance of the bearing compared to passive systems. K. Ryu [149] demonstrated that in the case of gas bearings, where the pressure control of the medium feeding the bearing is applied, an appropriate change in the value of this parameter allows for a significant reduction in the vibration amplitude of the rotor-bearing system when critical rotational speed values are exceeded. This type of bearing can therefore generate lower power loss values. An important advantage of lowering vibration amplitude is also increased service life.

Conventional passive gas bearings usually allow for damping of low-level natural vibrations. The solution to this problem is to use active control [176]. In the case of active gas bearings, the ability to quickly and precisely control the position of the rotor positively affects the rigidity of the bearing, thus improving its ability to dampen vibrations. These features make it possible to minimize bearing wear during start-ups and stops and to safely guide the system through resonant speeds.

F. G. Pierart and I. F. Santos [177] demonstrated that in addition to their high vibration damping capability, active gas bearings are also characterized by high precision and controllable rotor position and dynamic rigidity. They noted that the active pressure control of the medium feeding the bearing allows to significantly improve the vibration damping of the rotor-bearing system, which results in a significant reduction of the amplitude of vibrations caused by the rotor unbalance (Fig. 20). The authors proved that in their case, the use of active control allows the system to operate safely at both the first and second critical speed, resulting in an increase in the permissible bearing speed from 7000 rpm to at least 11,000 rpm.

The gas-lubricated plain bearing proposed by S. Morosi and I. F. Santos [169], in which active forces are generated by controlling radial lubricant injection with piezoelectric actuators, allows a much better reduction of synchronous vibrations compared to conventional passive systems. In this case, the authors noted that active control has a positive effect not only on the properties of resonance vibration damping but also on the vibrations occurring at FWHM frequency of the system, thus allowing for a wider application of this type of bearing (Fig. 21). In the article, the authors proved that with appropriate air injection regulation, it is possible to significantly reduce rotor displacement during bearing operation compared to passive systems, but this is not the only advantage of this design (Fig. 22). Studies showed that a bearing with active medium injection control is able to respond better to sudden shocks and excitations to which the system may be exposed.

Y. Lihua et al. [178] used an active control system for a gas bearing with tilting pads demonstrating that it had a positive effect on system vibration compensation. The results of tests carried out at a constant speed of 15,000 rpm (Fig. 23) show that, compared to a passive system without active control, shaft displacement resulting from unbalance can be significantly reduced by using an appropriate control system.

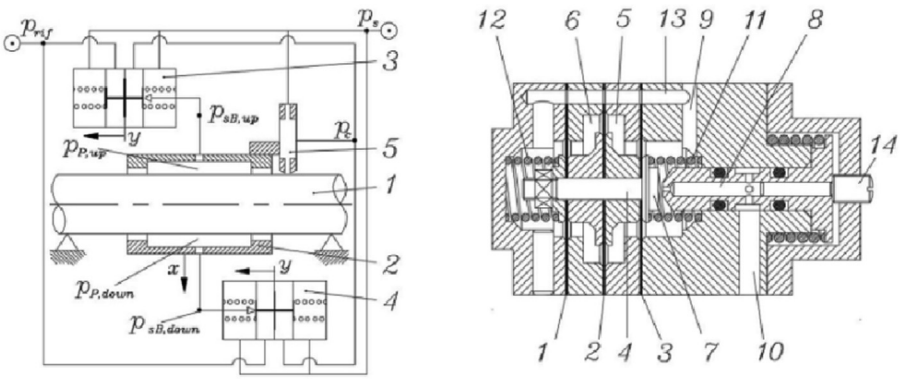

Fig. 19. a) active method of compensation by means of pneumatic valves b) bearing diagram (1 — shaft, 2 — bearing, 3,4 — control valves, 5 — counterpressure displacement transducer, 7 — flap controlling the flow through the nozzle, 8 — nozzle, 9 — supply pressure inlet, 10 — supply pressure outlet, 11, 12 — springs, 13 — hose, 14 — nozzle adjustment screw) [174].

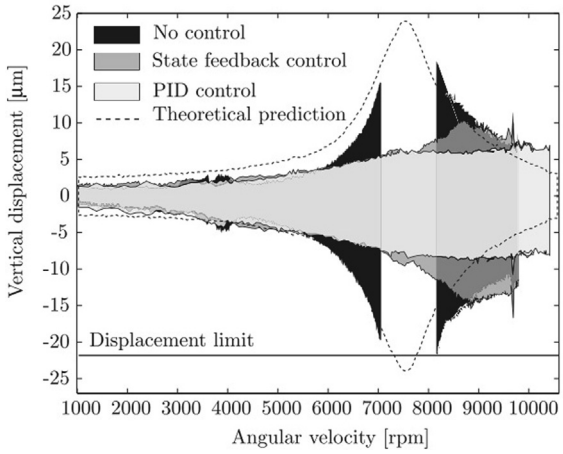

Fig. 20. Response to rotor unbalance for the speed range 1000 to about 11,000 rpm in the absence of regulation and for a system where two different types of control are used — PID control and state feedback control [177].

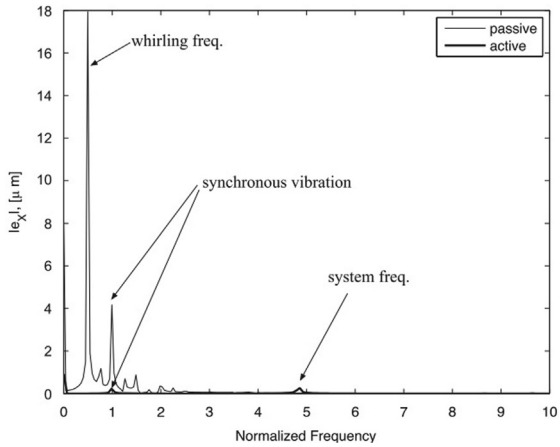

Fig. 21. Single-sided power spectra of rotor displacement responses, passive and active mode, 13,000 rpm [169].

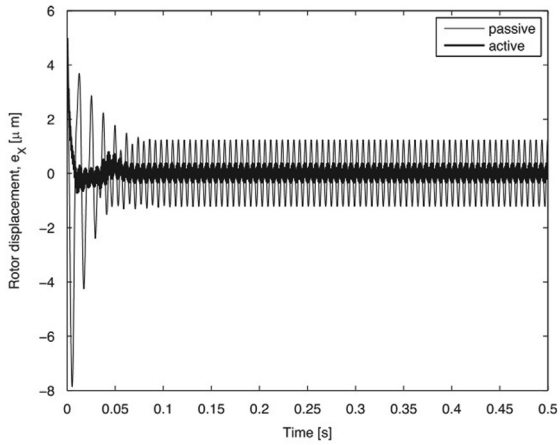

Fig. 22. Rotor displacement for passive and active system [169].

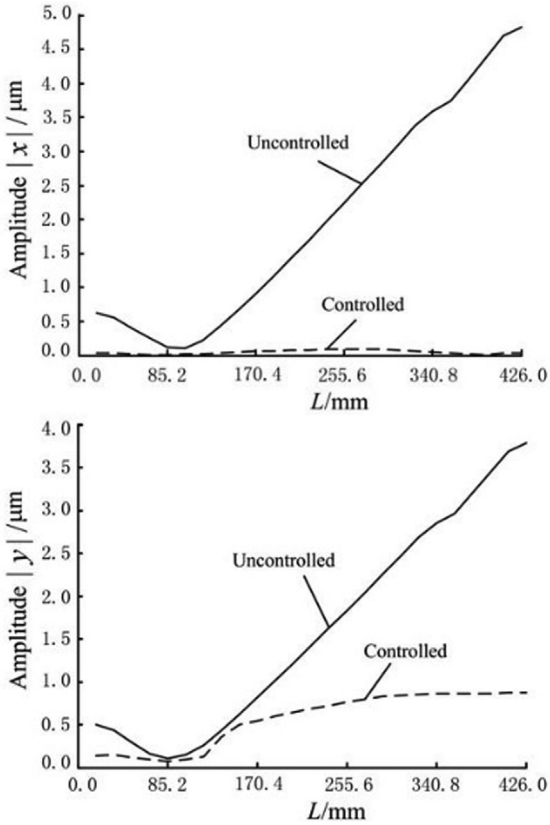

Fig. 23. Displacements of the rotor resulting from unbalance at 15,000 rpm in the x and y directions [178].

Y. Lihua et al. [178] made an attempt to modify the control system proposed by J. Qiu, J. Tani and T. Kwon [159]. For bearings of identical design and structure of the control system, they replaced the PID controller with a PD controller. In this case, research on the optimization of the control system also focused on reducing the vibration amplitude compared to a system without active control. The studies indicated that appropriately selected coefficients of the PD controller (similarly to the control system described by J. Qiu et al. [159]), allow for a reduction in the vibration amplitude in all considered directions, at variable speed. The authors observed the reduction of vibrations at all three measurement points of the system. The graph (Fig. 24) shows a decrease in vibration amplitude at 12,500 rpm from 5.5 μm to 1 μm, the vibrations in the analyzed speed range are also clearly reduced.

5. Magnetic bearings

Active magnetic bearings (AMBs) are considered to be an alternative and competitive solution to traditional bearings [179]. These bearings utilize the phenomenon of magnetic levitation, which consists in balancing the force of attraction between the electromagnet and the ferromagnetic journal. Due to the lack of lubricant and associated components, in particular sealing elements, this type of bearings does not generate any pollution. The main advantages of magnetic bearings are: the ability to operate in a vacuum, at high speeds, in extremely low and extremely high temperature and in harmful acidic or alkaline environment [180–182]. Active magnetic bearings can also be used as sensors, actuators and vibration exciters [183]. Accurate measurements of forces and displacements and the generation of axial and radial shaft motions are possible. Therefore, AMBs offer new application possibilities in turbomachinery, e.g. improved identification, diagnosis and optimization techniques.

The main disadvantages of these bearings include:

- Vibration damping — lower than in hydrostatic bearings.
- Price — usually a lot higher compared to traditional designs.
- Size — they are much larger than conventional non-contact bearings.
- Power supply — the need for uninterrupted electrical supply even when there is no load. After the power is cut off, the rotor will no longer levitate and will settle on the coils, which may damage them

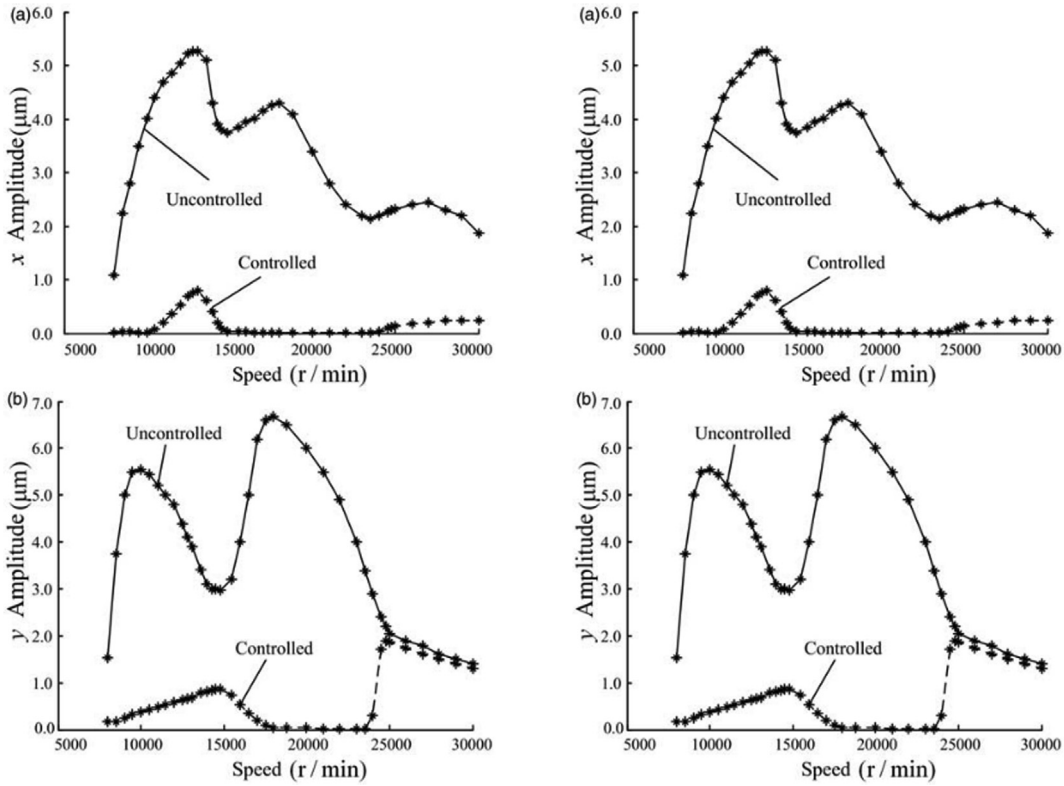

Fig. 24. Change of the vibration amplitude after application of the control shown for two measurement points in the x and y directions [178].

- Complex design — in order to protect against power failure an auxiliary bearing is used, which makes the system more complicated.
- Temperature — an increase in temperature causes a decrease in the maximum value of the magnetic field (despite this fact these bearings are also used at high temperatures).
- Cleanliness — in the case of machine tools and other processing equipment, the generated magnetic force attracts steel waste (e.g. chips).

The maximum rotational speed obtained during the experimental tests is 18,000,000 rpm and was achieved during material strength tests (until burst) of small spherical steel rotors (1–2 mm in diameter) under centrifugal load [184,185]. Currently, AMBs are used in devices whose operating speeds are in the range up to 300,000 rpm. During operation, the rotor may exceed several critical speeds in order to reach the nominal speed. In active magnetic bearings, a well-designed controller allows to reach the rated speed in a stable manner. The control system for the active magnetic bearing allows the rotor to pass through the eigenfrequencies of the rotor, as presented, for example, in paper [186]. Due to the lack of contact between the journal and the bearing cap in active magnetic bearings, no friction occurs [187–194].

5.1. Operating principle

The main AMB components, apart from the journal and measuring sensors, also include a power amplifier, coil, control system and stator [195–198]. The force is generated by the control current, which can be tuned according to needs, allowing to shape the stiffness of the bearing and even change its dynamics [185,199,200]. The maximum possible load on the magnetic bearings depends on the geometry of the electromagnets, the magnetic properties of the material, the electronics and the control system [201,202].

Based on the available measurement data, the control system used adjusts the position of the rotor axis by means of a current intensity change which affects the amount of electromagnetic force generated in the actuator. During the operation of an active rotor with magnetic levitation, the rotor is located in the air gap at the operating point, i.e. at equal distance from the pole pieces. This distance is one of the main suspension parameters that determines other system parameters such as current stiffness k_i and displacement stiffness k_s. These parameters determine the attraction force of the electromagnet F_m. In homopolar active magnetic suspension, the displacement of the rotor in the air gap is expressed by the following differential equation [203]:

$$m\frac{d^2x}{dt^2} = F_m \pm F_z = k_s x + k_i i + F_z, \tag{6.1}$$

where

m — rotor mass,
i — control current,
x — displacement of the rotor from the operating point,
t — time,
k_i — current stiffness,
k_s — displacement stiffness,
F_m — the attraction force of the electromagnet,
F_z — external interfering force.

After transforming the Laplace's equation (6.1) a transition function is obtained (6.2). From this equation, the transition functions are determined which describe the characteristics of the system for an input signal, i.e. the value of the control current (6.3) or the external force (6.4).

$$X(s) = \frac{k_i}{ms^2 - k_s} I(s) \pm \frac{1}{ms^2 - k_s} F_z(s), \tag{6.2}$$

$$G_{x,i}(s) = \frac{X(s)}{I(s)} = \frac{k_i}{ms^2 - k_s} \tag{6.3}$$

$$G_{x,F_z}(s) = \frac{X(s)}{F_z(s)} = \pm\frac{1}{ms^2 - k_s} \tag{6.4}$$

The systems with magnetic bearings can be divided into: axial (one degree of freedom) [204–206], radial (two degrees of freedom) [207–210], radial-axial (three degrees of freedom) [211–213], bearings with four degrees of freedom [214–217] and bearings with five degrees of freedom [218–221]. The division of radial magnetic bearings by the number of pole pairs is presented in paper [204]. This is a division into 3-, 4-, 6-, 8- and 12-pole bearings.

5.2. Application

Magnetic bearings have a wide range of applications, they are used, for example, in turbines, molecular pumps, refrigeration compressors and air compressors, ultra-speed machine tools, motors and high-speed flywheels [185,222–228]. Centrifuges are devices used in suspension separation technology. For particles that are smaller than a micron in diameter, high centrifugal acceleration values are required. For this purpose, a drive with magnetic bearings is used [227].

Active magnetic bearings are also used in gas turbines and turbojet engines, which require high-temperature resistance. A number of research teams are working to increase the maximum operating temperature of these bearings [229–235]. An example is an active magnetic bearing operating at temperatures up to 550 °C and at 30,000 rpm [233]. M. Mekhiche et al. [232] presented an article that describes tests of a bearing that was able to operate at a temperature of 600 °C at 50,000 rpm. The validation of the results of the TSI (Thermal Structure Interaction)/CFD (Computational Fluid Dynamics) was shown by B. Dong et al. in paper [236], describing tests of a 30 kW engine with a nominal speed of 60,000 rpm.

In 2007, there were attempts to use an AMB in a helium circulator, which is part of the HTR-10 nuclear reactor with a thermal capacity of 10 MW [237]. The rotor of the helium circulator operates at 250 °C with a pressure of 3 MPa, while the drive system operates at 65 °C and 0.1 MPa. Based on the shaft displacement values, the control system calculates the current value for the coils that keep the shaft in a levitating state. The system consists of three parts: inducement source sensor, demodulating circuits and digital signal processor.

Control of the active magnetic bearing by means of a PID controller is used in maglev blood pumps [238]. The pump's rotor is supported by two radial magnetic bearings and one axial magnetic bearing. After the input of the interference, the system regains stability after 0.1 s. A blood pump, consisting of two hybrid radial bearings and a DC motor, uses an active radial magnetic bearing and a passive axial bearing. Simulations were carried out in which correct bearing operating parameters up to 10,000 rpm were achieved.

The use of an active magnetic bearing in a high-speed spindle was presented by C. R. Konspe in the paper [239]. The operation of a PID controller, speed-independent controller and speed-specified controller was compared. During testing of the system in the speed range 0–5000 rpm, high noise level from the sensor, low efficiency of feedback control and the need to refine the actuator design were found. In turn, the ultra-high-speed spindle [240] uses three active magnetic bearings — one axial and two radial. The unit's speed reaches 60,000 rpm and is powered by a 1 kW motor. The use of homopolar or heteropolar radial AMBs allows stable operation at 60,000 rpm. It has been shown that the use of homopolar AMBs is beneficial in high-power equipment, e.g. electric aircraft engines. The experimental results of rotor position control by means of an AMB are shown in Fig. 25 [241]. In the control system, the target rotor position is set as a reference value. In the conducted

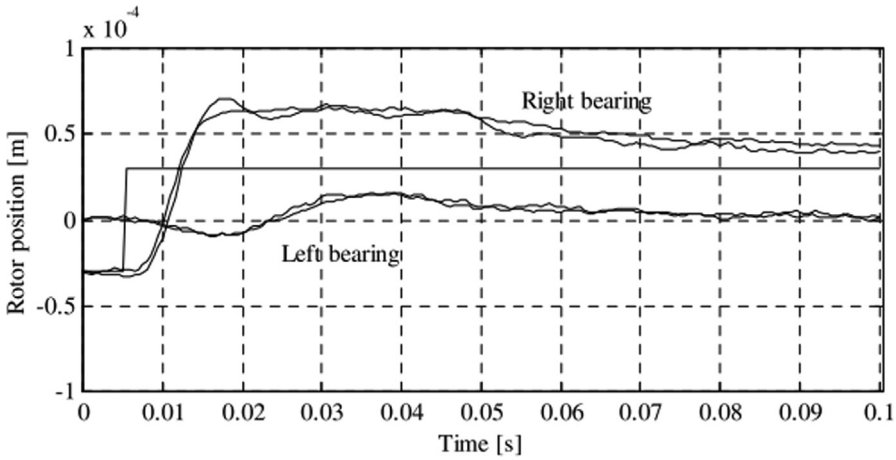

Fig. 25. Time characteristics of rotor position [242].

research it was set at $3{\cdot}10^{-5}$ m. The journal of the left bearing has stabilized in its center. The journal of the right bearing is close to the desired value.

The paper by D. Meeker et al. [192] presents the level of energy losses in AMBs depending on the number of magnetic fields used and the size of the gaps. The values were obtained during laboratory tests for speeds up to 30,000 rpm. The maximum loss at the level was obtained for 16 magnetic fields, $0.38{\cdot}10^{-4}$ m gaps at a rotational speed of 30,000 rpm (Fig. 26).

5.3. Bearing control

Very often the control system is crucial for the proper functioning of active magnetic bearings and can determine their properties. Passive magnetic bearings (MBs) most commonly use permanent magnets, if there is a possibility to change the magnetic field generated by these bearings, the bearing becomes an active magnetic bearing (AMB). Controlling an active magnetic bearing system is a challenge for a number of different reasons. This system requires stabilization of feedback otherwise, the system is unstable. The SISO (single-input, single-output) method proves to be insufficient and one solution is to use more complex control methods, such as MIMO (multiple-input, multiple-output) control methods [195]. Most existing active magnetic bearing models are simple representations of actual operating conditions, which increases the uncertainty of bearing control. These models are usually linear approximations and their accuracy can only be provided close to a specific operating point [195].

Control by means of a measuring and control board with a 16-bit Siemens SAB80C167LM microprocessor was presented by D. Kozanecka in paper [243]. The measurement and control board generates signals in the form of a rectangular wave pulse with a variable duty cycle. After being properly formed, they are transferred to the control block, which also receives signals from the current measurement system in bearing's electromagnets. If this signal indicates that the electric current limit is exceeded, the power amplifiers remain inactive.

The PID controller is the most popular controller used to stabilize AMBs [244–251]. The main advantage of this type of controller is simple implementation and tuning. On the other hand, it should be mentioned that this system is not resistant

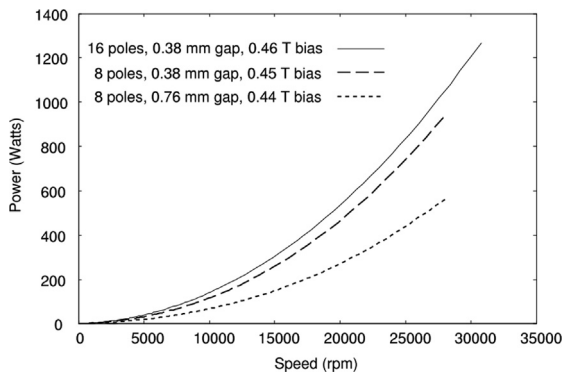

Fig. 26. Reduced energy losses for different numbers of magnetic fields and different gap sizes [192].

to interference. A general control diagram is shown in Fig. 27. The most common bearing modifications consist in replacing the controller with one of a different type [241].

The regulation of the rotor displacement by means of three AMBs control methods was presented by M. Gohari in the paper [252]. Using artificial neural networks and iterative learning control with AMBs, a reference (expected) value was achieved in about 0.25 s, which in the classic approach with the use of a PID controller took almost four seconds (Fig. 28). Q. Li et al. [253] shows active rotordynamic stability control by use of a combined active magnetic bearing and hole pattern seal component for back-to-back centrifugal compressors.

There are also papers on the use of FOPID (fractional-order proportional-integral-derivative) controllers [254,255] used with AMBs [256–259]. A. M. Shata et al. [260] presented an article in which they described control of magnetic bearings using PID and FOPID controllers. Parameters were selected using the Particle Swarm Optimization (PSO) algorithm. The system uses magnetic bearings mounted at both ends of the shaft. The control strategy used was to minimize signal error in order to obtain the best response. In this control system, three parameters are set in the PID controller and five parameters in the FOPID controller. The PSO algorithm is responsible for finding optimal parameters. The design of the FOPID controller is similar to that of the popular PID controller. The main difference is that the differential and integral terms are adaptive.

The comparison of optimization of the PID and FOPID controller settings using PSO (Particle Swarm Optimization) and ABC (Artificial Bee Colony) algorithms was presented by Z. Bingul and O. Karahan [261]. Based on the results obtained, it was found that from the point of view of the determination time and steady-state error, the controller tuned using the

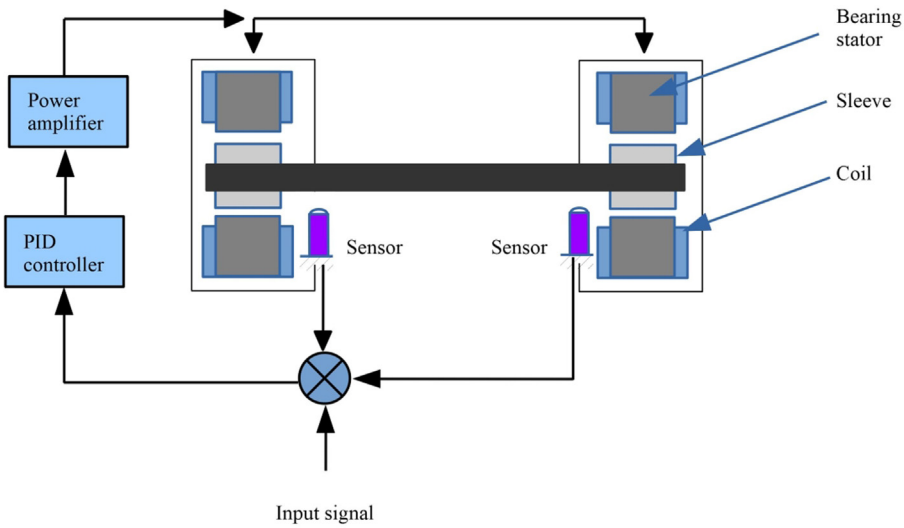

Fig. 27. Diagram of magnetic bearing control.

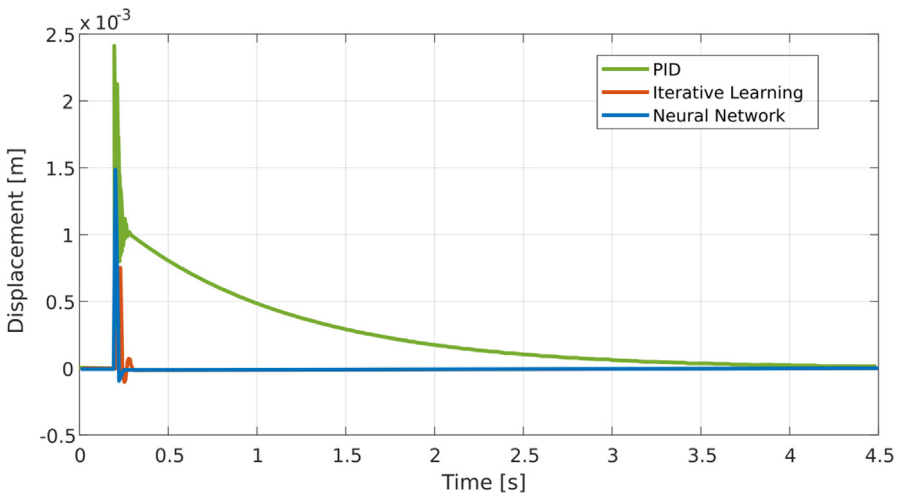

Fig. 28. Time characteristics of AMBs for different control methods. Figure based on [252].

ABC algorithm obtained better parameter values than the one tuned with the PSO algorithm. Moreover, the results obtained indicate that the controller tuned using the ABC algorithm is resistant to internal and external interference.

The effective use of artificial neural networks in magnetic bearing control is described in a number of scientific articles [252,262–264]. The block diagram of an artificial neural network control system is presented in Fig. 29. It consists of an artificial neural network, a reference model and the adaptive delta modulation [263]. The application of this solution allowed to achieve minimum shaft deviations from the initial position for different rotor speeds and existing unbalanced masses. The tests were carried out for speeds ranging from 3600 rpm to 9600 rpm for a shaft weighing 2.72 kg.

Y. Harkouss et al. [265] presented different types of neural networks and compared their performance. The wavelet transform was used to obtain improved neural network initialization and thus to improve the convergence of the learning algorithm. Two control systems based on three types of neural controllers were tested: Multilayer Perceptron (MLP), Radial Basis Function Network (RBFN) and Where-What Network. As a result of the conducted works, the highest prediction accuracy and adaptability for the WNN (Where-What Network) method was obtained. In addition, the WNN method was found to be easier to apply than the RBFNN method.

The linear-square controller is an important part in solving the problem of controlling magnetic bearings [242]. In a linear-quadrature control, it is about defining the settings of a controller for a machine using a mathematical algorithm that minimizes the target function. Y. N. Zhuravlyov [266] described two such systems (of the second and fourth order) concerning magnetic bearings. The resulting control system ensures optimal determination of bearing strength and minimizes copper losses in coils. The Van der Pol [267] method was used to analyze system stability.

Z. Gosiewski and A. Mystkowski [268] presented a control system of a rotor supported on magnetic bearings. For robust control, a reference model was defined taking into account the model uncertainty. The properties of a closed system with a PID controller were compared with those of a system with H and H2 robust controllers. The adjustment of the system by means of robust control is also described by E. Lantto in paper [269]. It was found that the minimum lifting force needed to pass the critical speed depends on the geometry of the rotor, its location and the unbalance distribution. As a result of measurements of performance limits (for each frequency), it was noticed that one H controller did not reach the assumed values.

Active magnetic bearings operate under varying conditions. A control system should therefore be installed to ensure system stability. W. Ding et al. [270] compared the operation of a PD controller, a fuzzy logic PD controller, a fuzzy logic controller and an H controller. The rotor with a nominal speed of 3000 rpm and a mass of 3.5 kg was simulated during the tests. It was found that the H controller had the shortest tuning time and the fuzzy controller the least overshooting. The combination of fuzzy logic and a PD controller resulted in the smallest error.

Another method of controlling AMBs is adaptive control [226,271–276]. OLAC (Open Loop Adaptive Controller) algorithms were developed to minimize synchronous vibrations [277]. Such an approach does not require knowledge of the system characteristics. Information received from this system can be used to detect faults in AMBs [278]. The main disadvantage of OLAC algorithms is that they require at least one reference value before calculating the optimum control force when any change in the system frequency response is detected. This control method may not be sufficient if there is a sudden change in the unbalance level. Therefore, a recursive formula was introduced that updates the amplitude and phase of the force during each sampling period. This resulted in the creation of the ROLAC (Recursive Open Loop Adaptive Controller) system [279].

Sliding mode control is another control method that changes the dynamics of a non-linear system by using a discontinuous control system [280–286]. Z. Gosiewski and M. Żokowski [281] presented the control of AMBs displacement using

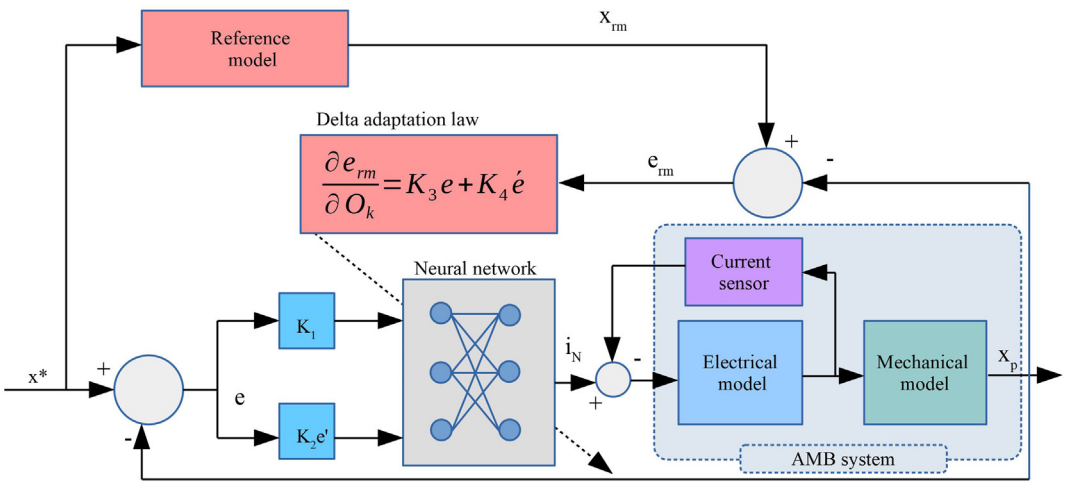

Fig. 29. Block diagram of an AMB control system using an artificial neural network. Figure based on [263].

sliding mode control. The basic idea of this system is to replace the system of the nth order with a first-order system to facilitate control. The method limits the problem to tracking and controlling a scalar.

The hybrid (radial-axial) arrangement of magnetic bearings is characterized by high non-linearity, which requires appropriate control. In paper [287] H. Li and X. Chen presented a sliding mode variable structure control (SMVSC) system and confronted it with a traditional PID controller. Compared to a PID controller, an SMVSC controller guarantees system stability. In addition, it reduces the number and value of overshootings and shortens the time of system adjustment.

This chapter presents a number of methods of controlling the active magnetic bearing. The main direction of development of active magnetic bearings is focused on improving control algorithms. Many of the methods described are commonly used in industrial systems. Y. N. Zhuravlyov [266] described two such systems in his article. Given the prevailing trends in optimization, it seems that the main direction of development of control is artificial neural networks, which are successfully used for optimization, forecasting, diagnosis and safety assessment.

5.4. Advantages of active control

A bearing in which the magnetic field is not controlled during operation is called a passive magnetic bearing. By adding the possibility to change the magnetic field it will become an active magnetic bearing. Active magnetic bearings allow for precise positioning of the shaft and good integration into the control and measurement system. Rotor vibrations in AMBs can be actively dampened, which is particularly important when operating at critical rotor speeds. In the case of active magnetic bearings, crucial properties such as stiffness and damping can be modified, and thus adapted to momentary needs without any modification of the system. Modern control systems allow for real-time tuning and adaptation. Due to the sensors and actuators used, active magnetic bearings are ideal not only for rotor positioning but also for other purposes such as monitoring, maintenance or identification of rotor-bearing systems. These functionalities are possible without the need for additional equipment [179].

The comparison between AMBs and MBs was presented, inter alia, by K. Falkowski and M. Henzel [288]. The step response of the two types of bearings to a given displacement is shown in the form of a voltage diagram in Fig. 30. In the first bearing (MB), the displacement value ranges from 0 to 0.2 V (fixed value). The active bearing, on the other hand, in most cases achieves the target value, which is a sign of greater flexibility of this solution.

F. Dohnal and R. Market [289] showed that a vibrating system can be stabilized and its vibrations can be suppressed by an open-loop control of a stiffness parameter or by parametric stiffness excitation. A periodic open-loop control of the stiffness coefficients of a bearing is realised by periodically changing the control parameters of an active magnetic bearing. This periodic variation of control parameters is regulated at fixed frequency and amplitude in such a way that it acts like a parametric excitation in the rotor system.

Y. Liu et al. [290] studied the impact of forces resulting from the unbalance on AMBs. This force is directly proportional to the square of the speed and increases sharply as the speed increases. Excessive unbalance force can result in a high control current, which in turn can affect the stability of the rotor system due to the saturation characteristics of the power amplifier. The authors have examined two modes of operation of the system: the first one that takes into account the control and the second one that operates on fixed actuator values. Based on the response of the control system, it was found that the

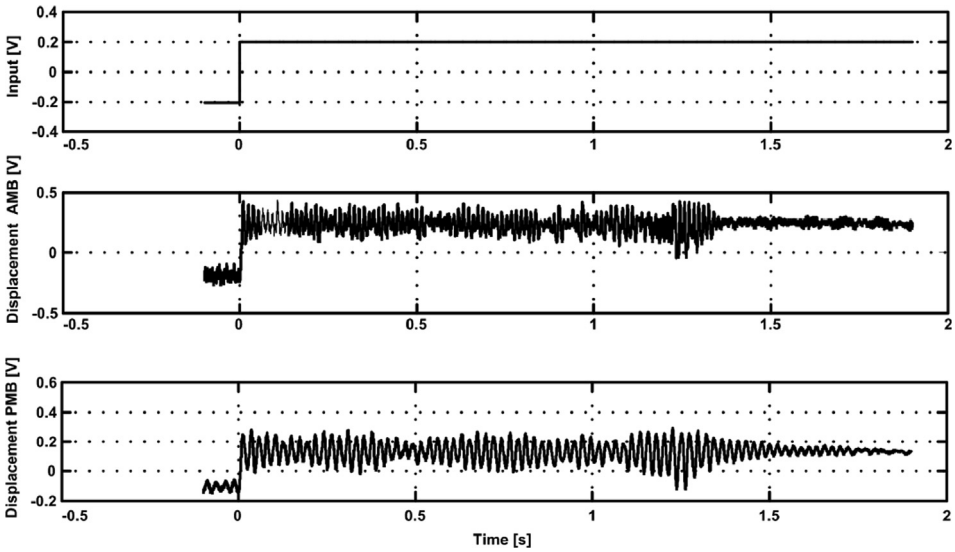

Fig. 30. Response of active magnetic bearing (AMB) and passive magnetic bearing (MB) system to a given external signal [288].

displacement of the rotor and the corresponding control current does not increase significantly due to the higher speed, which consequently does not saturate the power amplifier. In the case of the system without control, the authors observed a significant increase of the control current, which may cause damage to the power amplifier resulting in a necessity to stop the rotating system.

Fig. 31 presents a comparison of displacement and control current for different rotational speed values [290]. For speeds lower than 3000 rpm, the rotor displacement takes a parabolic form for a system with controllable AMBs and reaches a maximum for speed close to 1500 rpm. At speeds exceeding 3000 rpm, displacement curve and corresponding control current are lower than those of the system without control.

6. Traditional bearings

Plain bearings and rolling-element bearings are not controllable but may be used as parts of hybrid bearings (last category in Fig. 1). Using them as part of hybrid bearings used as a part of the system is influenced by both their properties and the properties of the other type of bearing used, e.g. an active gas bearing. Due to this fact, their brief characteristics are presented below. The next chapter presents examples of the changes in dynamic properties that can be obtained for hybrid bearings using rolling-element and plain bearings that form active bearings.

Rolling-element bearing technology has been under constant development for over 4000 years [291]. The technology of these bearings and the bearing industry began to develop more dynamically with the invention of the bicycle in the 1850s. At the same time, the creation of the Bessemer process enabled the production of high-quality steel. In 1881, H. Hertz published his work on contact stresses. All types of currently used rolling-element bearings were already manufactured before 1920 [292]. Since 1918 engineers have focused their attention on improving the service life of bearings. In 1924, A. Palmgren published his article describing his approach to service life prediction. In 2011 P. K. Gupta [293] presented a paper on the development of rolling-element bearings and their prospects for development. H. Cao et al. [294] presented an overview of bearing modeling methods in 2018. The research on this topic is still vital. Z. Shi I J. Liu [295] presented a planar dynamic model for vibration analysis of a cylindrical roller bearing in 2020.

The parameter defining the maximum permissible speed is very often used to describe bearings. The speed limit makes the minimum diameter of the bearing journals be applicable. High loads can be applied at low and medium speeds. Small diameters of bearing journals lead to the reduction of rotor stiffness and large tip clearances, which was emphasized in a paper written by L. Wang et al. [296]. B. Fang et al. [297] shows a comprehensive study on the speed-varying stiffness of ball bearing under different load conditions. An important aspect of the operation of rolling-element bearings is also the way they are lubricated, which can have a very large impact on their service life [298]. Solid greases are one of the most commonly used lubricants [299]. In rolling-element bearings, seals made of ferromagnetic materials are used. This can increase the service life of such bearings [300].

Bearings with sliding surfaces have been known for a long time now, often based on various geological phenomena, imitating animal anatomy, e.g. in Roman chariots the wheel axis was lubricated with animal fat [88]. There are numerous applications where the bearing load is low and/or the rotational speed between the parts of the bearing is small enough and no rolling elements or full film lubrication are needed. These bearings are limited in their application mainly due to their maximum operating temperature and fast adhesive wear mechanism.

For extreme temperatures, both high and low, plain bearings use solid greases such as carbon graphite, molybdenum disulfide and polytetrafluoroethylene (PTFE) [301]. An overview of bearings with partial slip, lubricated with Newtonian fluids was presented by A. Senatore and T.V. V. L. N. Rao in paper [302]. The authors in the article proved that partial slip of textured surfaces can effectively improve load capacity and reduce the friction coefficient between the shaft and the bearing. F. Marques et al. [303] shows a survey and comparison of several friction force models for dynamic analysis of multibody

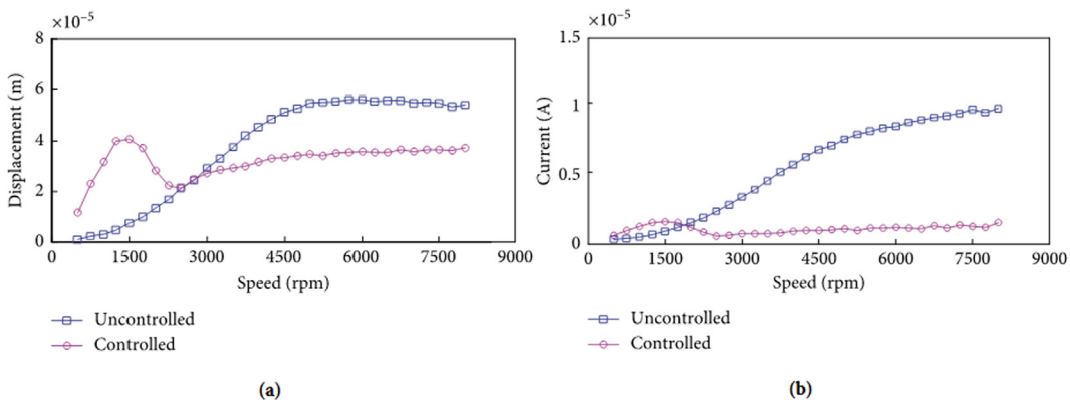

Fig. 31. Comparison of displacement and control current for different speed values [290].

mechanical systems. L. Niu et al. [304] shows experimental observations and dynamic modeling of vibration characteristics of a cylindrical roller bearing with roller defects. The materials that can be used to produce bearings are constantly being developed. A summary of tribological tests of contemporary materials and coatings used, inter alia, in bearings was presented by E. E. Nunez et al. in paper [305].

7. Hybrid bearings

Controllable bearings can be created by combining the design of traditional bearings with controllable bearings (e.g. gas bearings and active magnetic bearings). Descriptions of a number of bearings created as the addition of elements enabling active control to traditional bearings can be found in the literature. These are often called hybrid bearings. Elements enabling active control include for example mechanical actuators [306], combinations of piezoelectric and hydraulic actuators [307] or magnetization of the bearing journal lubricated using a ferrofluid [133], electrorheological damper [308], a magnetorheological damper [309], foil-magnetic hybrid bearing [310] or complex bearings supporting flexible rotor, controlled by means of hydraulic chambers [311]. While active magnetic bearings have a relatively long development history, new components emerge forming hybrid bearings such as squeeze-film dampers and controllable squeeze-film dampers. The use of magnetorheological and electrorheological fluids, active hydraulic chambers and combination of various types of bearings is becoming increasingly common. Hydrodynamic bearings in combination with magnetic bearings are called hybrid bearings and are used for example in blood pumps [312–314]. R. Pilotto et al. [315] used only one additional AMB together with oil-film bearings for the purpose of active vibration control.

A. Abed et al. [316] presented numerical analyses of a three-pad hydrostatic damper with electrorheological valve restrictors. Their work was continued by M. Benadda and A. Bouzidane, who presented results of non-linear calculations in their article [107]. Fig. 32 presents a diagram of a hybrid bearing with three identical hydrostatic pads. Each pad is powered by a negative electrorheological fluid using an electrorheological valve. Numerical analyses proved that the viscosity of a smart fluid can be controlled by an electric field, which in turn creates a possibility of controlling the static and dynamic characteristics. As a result, rotor vibrations can be controlled.

S. N. Jeong et al. presented an example of a hybrid bearing being a combination of a foil bearing and an active magnetic bearing [317]. According to the authors, this is an example of a combination of two oil-free technologies enabling asynergistic combination so as to adopt the positive features of both these bearings while minimizing their drawbacks. The authors focused on the control of flexural vibrations of a susceptible rotor. Experimental tests were carried out to determine the performance parameters of the bearing and its response to unbalance. The tests were carried out for three types of bearings: air-foil bearings, magnetic bearings and hybrid bearings. Analyses demonstrated that a hybrid bearing can control the first flexural form of natural vibrations of a flexible rotor in an efficient way with the best results.

A. Martowicz et al. [318] presented experimental and numerical study on the thermal control strategy for a gas foil bearing enhanced with thermoelectric modules. The authors report the method for temperature gradient control in gas foil bearings with the use of thermoelectric modules. The control algorithm allowed for a significant temperature gradient reduction, however considerable oscillations in the temperature profile were observed. In order to eliminate these oscillations, a PID controller was implemented into the algorithm. Consequently, the magnitude of the temperature oscillations was reduced by 60%.

A. El-Shafei and M. El-Hakim [319] described experimental tests on hybrid squeeze-film dampers (HSFDs) used to actively control rotor vibrations. The mathematical model runs in a closed loop. The activation and deactivation of control were based

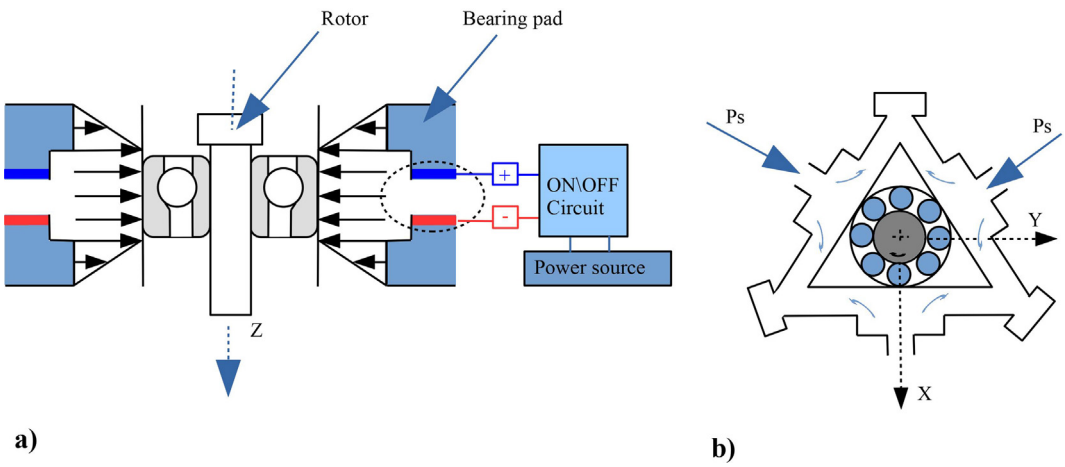

Fig. 32. Hydrostatic damper controlled by means of an electrorheological limiter valve. Figure based on [107].

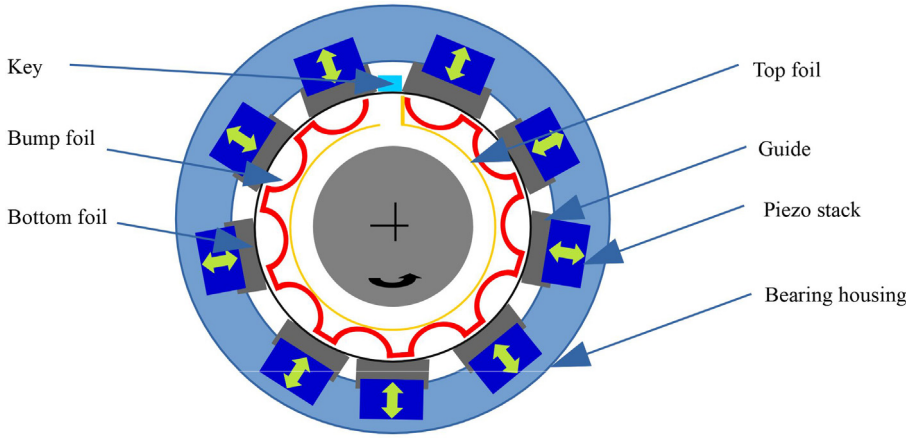

Fig. 33. Model of a foil bearing with actuators. Figure based on [322].

on speed measurement. Based on simulation analyses, the authors found that speed is a parameter that can be used for effective vibration control. The experimental system consisted of a rotor and HSFDs controlled by a servo valve for pressure control in the bearing chambers. The hydraulic circuit was controlled by a computer with a data acquisition and control system. It turned out that the system is effective in controlling the first form of the rotor's natural vibrations.

The tests presented by S. Jeong and Y. B. Lee [320] demonstrated how hybrid foil-magnetic bearings (HFMBs) affect eccentricity and vibrations. This type of bearing consists, as in the previous case, of an air-foil bearing and an active magnetic bearing. The authors stress that HFMBs bearings can be used as an alternative to AMBs. In these tests, the supported rotor operated at 18,000 rpm and the tests were performed using a proportional-derivative algorithm. When the HFMB was active, magnetic force control was very effective in reducing sub-synchronous vibrations.

M. N. Pham and H.J. Ahn [321] presented experimental results of optimization of foil-magnetic bearing, working with a flexible rotor. An analysis of the unbalance response of the rotor was carried out, in which the rotor was supported on two bearings. The level of dampening of vibrations at the first flexural form of natural vibrations was higher for the hybrid bearing than for the foil bearing alone. As a result of the tests carried out, a hybrid bearing controller was created, which not only allowed for a 26% reduction of the level of vibrations recorded at the speed corresponding to the first flexural form of rotor's natural vibrations but also reduced the motor's energy consumption by 50% during start-up.

J. Park and K. Sim [322] presented a foil bearing controlled by piezoelectric actuators. In this bearing, the geometry changes generated by piezoelectric actuators affected the foils, and these, in turn, affected the changes in the air film. The tested bearing consisted of nine piezoelectric stacks. All the tests were simulation tests, the purpose of which was to check the performance of the bearing whose diagram is shown in Fig. 33.

The combination of a magnetic and foil bearing was, for example, the subject of a patent filed by C. Ho et al. [323]. It is not only the adequate design of the bearings themselves that improves their anti-vibration properties. It is also possible to control vibrations by using an electromagnetic damper [324]. J. J. Nikolajsen et al. demonstrated the effectiveness of the electromagnetic damper mounted on the transmission shaft [325]. To dampen vibrations, A. B. Palazzo et al. used piezoelectric actuators [326] shown in Fig. 34. The controller contained an active analog component and a digital computer. By introducing active stiffness and damping, very effective vibration control was achieved.

8. Summary and directions for future research

The amount of work related to active/controlled bearings is too great to be able to include everything in one overview article, and that was not the purpose of this paper. The aim of this paper was to review and summarize the main trends and concepts related to controllable bearings. When analyzing the development and research of the described active bearings, attention is drawn to the diversity of their concepts, which are described in this article.

The development of active magnetic bearings, as compared to other active bearings, started relatively early, therefore their designs are well developed and thoroughly tested, and currently the focus is placed on improving control systems. Active control has received increased attention in recent years with regards to its implementation and research. We can say that active control is being adopted to different types of bearings. Although we cannot say that controllable bearings are a standard solution in the industry, the current level of development allows for the increasingly common use of active bearings outside of laboratory conditions. The prospects for using these bearings are very promising. This paper presents various applications of controllable bearings. The article contains a description of the basic properties of traditional bearings and many examples of actively controlled bearings. Advantages and disadvantages of controllable bearings are presented. There are many methods of optimizing the design of bearings, for example those presented by J. K. Martin [327], however, better

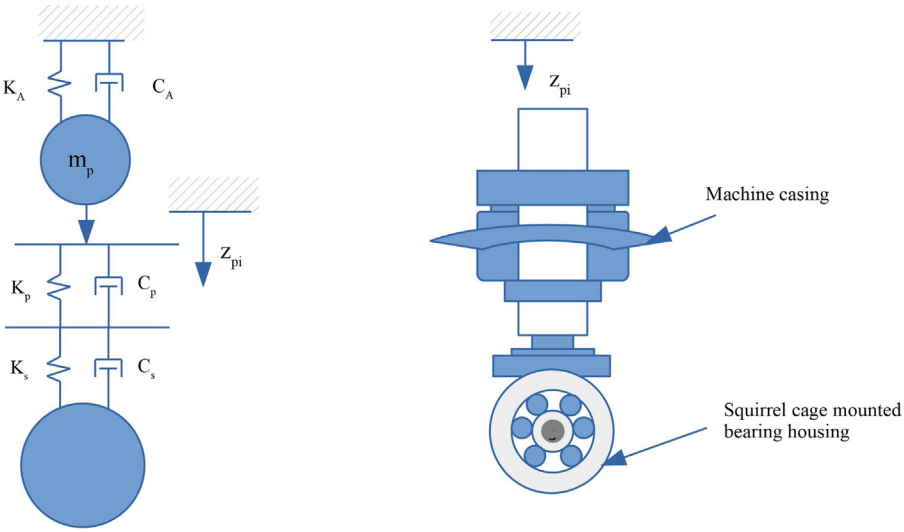

Fig. 34. Piezoelectric inducement visualization. Figure based on [326].

results in terms of improving the dynamic properties of the rotors are obtained by introducing active control of the bearings during their operation. In order to develop active bearings, research on their different types is being carried out, as summarized in Fig. 35.

Observing the new emerging concepts of bearings, a focus on certain trends is quite clear, which can be summarized in the following six points:

- Optimization of control algorithms both by selecting appropriate controller parameters (e.g. PI, PD or PID) as well as by using tools such as artificial neural networks, fuzzy logic, etc. to control them [159].
- Increasing bearing capacity, e.g. by testing new ferromagnetic fluids [133].
- The calculation of some types of bearings can still be very time-consuming, especially combining different bearing models, for example, fluid film with structural interactions of foil bearings [328](or additionally with a complex magnetic field [310]).
- Improving individual bearing components, for example, by using better actuators [112], optimizing bearing pressure distribution [319] or adding better supply systems [89].

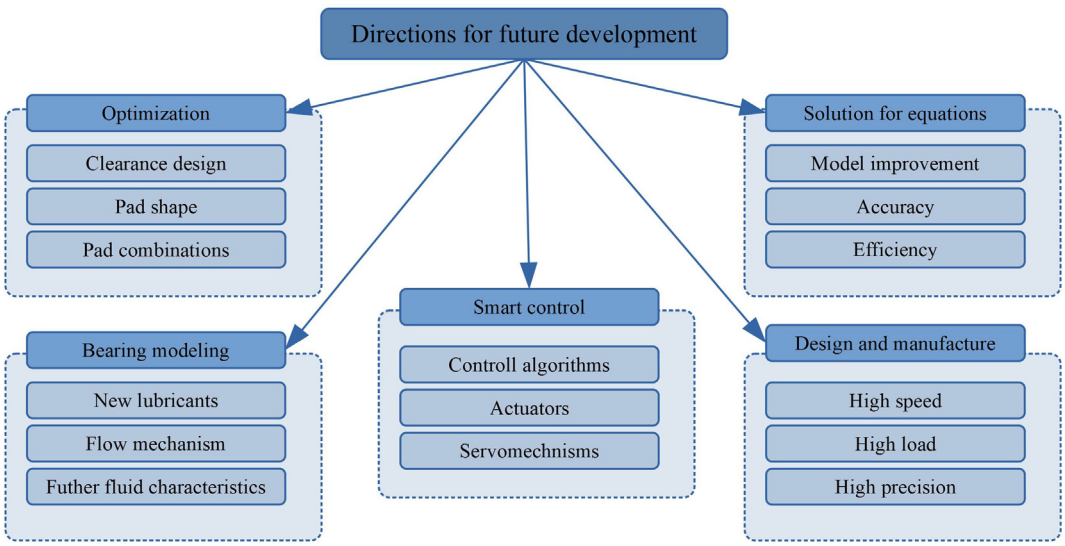

Fig. 35. Future development of radial bearings.

- Optimization of individual bearing parts, e.g. by finding the optimum offset in the bearing, the size of the lubrication gap, the shape of bearing pads, etc. [329].
- There is a trend to combine different types of bearings, e.g. foil and magnetic bearings or foil bearings with additional actuators.

There is a number of publications presenting comparisons of active and passive bearings of all types. Most of them indicate that active bearings work better in a wide range of rotational speeds allowing to reduce or eliminate resonant vibrations (e.g. [121] or [177]). Some studies suggest that it is easier to control synchronous ([169]) or sub-synchronous vibrations. In an active control system it is usually necessary to use measurement sensors [330], e.g. displacement sensors. Such a system is also necessary for diagnostics, which can be easily carried out on bearings during operation. Active bearings enable on-line "ad hoc" diagnostics. The advantages associated with the use of active control also include better temperature control, better efficiency, longer permissible operating time, increased eco-friendliness (possibility of using safer lubricants). All of these advantages may result in the costs of active bearings being lower (which has also been highlighted in paper [130]). The use of active bearings can lead to less frequent maintenance inspections, lower losses and safer bearing operation.

Research on controllable bearings focuses on both macro and micro scale. Solutions from one type of bearing (e.g. fluid bearings) are transferred to another type of bearing (e.g. gas). Scientists are using new materials as well as new and increasingly sophisticated equations. Adding active control to traditional bearings usually has a positive effect on the rotor-bearing system. This motivates the continuation of such work. Controllable bearings are a "subset" of a wider set of bearings, thus the overall development of bearings will also have a positive impact on the development of controllable bearings. It is quite certain that the progress in optimization, modeling, better mathematical description and manufacturing technology will also contribute to the development of active bearings. The development of controllable bearings is influenced by the emergence of new concepts, the main trends of which are presented in this article. It seems that in the case of controllable bearings, the development of smart control (algorithms enabling faster and more accurate control) is also crucial.

Declaration of Competing Interest

The authors declare that they have no known competing financial interests or personal relationships that could have appeared to influence the work reported in this paper.

Acknowledgments

We would like to express our gratitude to Professor Grzegorz Żywica for his invaluable and constructive input during the work on this paper.

Funding

This paper was created within the framework of the ACTIVERING project entitled "Aktywne łożyska foliowe ze zmiennymi właściwościami dynamicznymi" (Eng. *Active foil bearings with variable dynamic properties*), agreement no. LIDER/51/0200/L9/17/NCBR/2018, implemented as part of the research and development programme called "LIDER" (Eng. *LEADER*).

References

[1] A. Muszynska, Rotordynamics, CRC Press, 2005, https://doi.org/10.1201/9781420027792.
[2] A. Babin, A. Rodichev, V. Tyurin, Numerical and experimental studies of axial stability of rotors on thrust fluid-film bearings with active control, in: 2018 Int. Russ. Autom. Conf., IEEE, 2018, pp. 1–6. https://doi.org/10.1109/RUSAUTOCON.2018.8501711.
[3] I.Y. Shen, W. Guo, Y.C. Pao, Torsional vibration control of a shaft through active constrained layer damping treatments, J. Vib. Acoust. Trans. ASME. 119 (1997) 504–511, https://doi.org/10.1115/1.2889752.
[4] Z. Liu, Y. Wang, L. Cai, Y. Zhao, Q. Cheng, X. Dong, A review of hydrostatic bearing system: researches and applications, Adv. Mech. Eng. 9 (2017) 1–27, https://doi.org/10.1177/1687814017730536.
[5] V. Kumar, Porous metal bearings — a critical review, Wear. 63 (1980) 271–287, https://doi.org/10.1016/0043-1648(80)90055-1.
[6] M.Z. De la Hoz, F. Pozo, Advances on Analysis and Control of Vibrations - Theory and Applications, InTech, 2012, https://doi.org/10.5772/2586.
[7] C.W. De Silva, A. Borbely, J.F. Kreider, L.R. Davis, Vib. Damping, Control, Des. (2007), https://doi.org/10.1201/9781420053227.
[8] C. Du, L. Xie, Modeling and Control of Vibration in Mechanical Systems, CRC Press, 2010.
[9] W.K. Gawronski, Advanced Structural Dynamics and Active Control of Structures, Springer, New York, New York, NY, 2004, https://doi.org/10.1007/978-0-387-72133-0.
[10] Ł. Breńkacz, G. Żywica, M. Bogulicz, Selection of the bearing system for a 1 kW ORC microturbine, Mech. Mach. Sci. 60 (2019) 223–235, https://doi.org/10.1007/978-3-319-99262-4_16.
[11] Ł. Breńkacz, G. Żywica, M. Bogulicz, Selection of the oil-free bearing system for a 30 kW ORC microturbine, J. Vibroeng.. 21 (2019) 318–330. https://doi.org/10.21595/jve.2018.19980.
[12] Ł. Breńkacz, G. Żywica, M. Bogulicz, Analysis of dynamical properties of a 700 kW turbine rotor designed to operate in an ORC installation, Diagnostyka. 17 (2016) 17–23, http://www.brenkacz.com/images/publications/Brenkacz et al. -2016 - Analysis of dynamical.pdf.
[13] D.N. Harold, Rotordynamic modeling and analysis procedures: a review, JSME Int. J. Ser. C. 41 (1998) 1–12, https://doi.org/10.1299/jsmec.41.1.
[14] M.L. Adams, Rotating Machinery Vibration, CRC Press, 2009, https://doi.org/10.1201/9781439847558.
[17] L. Gu, E. Guenat, J. Schiffmann, A review of grooved dynamic gas bearings, Appl. Mech. Rev. 72 (2020), https://doi.org/10.1115/1.4044191.

[18] D.F. Ledezma-Ramírez, P.E. Tapia-González, N. Ferguson, M. Brennan, B. Tang, Recent advances in shock vibration isolation: an overview and future possibilities, Appl. Mech. Rev. 71 (2019), https://doi.org/10.1115/1.4044190.
[19] L. Jin, R. Khajehtourian, J. Mueller, A. Rafsanjani, V. Tournat, K. Bertoldi, D.M. Kochmann, Guided transition waves in multistable mechanical metamaterials, Proc. Natl. Acad. Sci. (2020) 201913228, https://doi.org/10.1073/pnas.1913228117.
[20] Y. Yu, N. Bouklas, C.M. Landis, R. Huang, Poroelastic effects on the time- and rate-dependent fracture of polymer gels, J. Appl. Mech. 87 (2020) 1–10, https://doi.org/10.1115/1.4045004.
[22] Ł. Breńkacz, G. Żywica, M. Drosińska-Komor, N. Szewczuk-Krypa, The experimental determination of bearings dynamic coefficients in a wide range of rotational speeds, taking into account the resonance and hydrodynamic instability, in: Springer Proc. Math. Stat., 2018. https://doi.org/10.1007/978-3-319-96601-4_2.
[23] J.W. Lund, J.W. Loud, Review of the concept of dynamic coefficients for fluid film journal bearings, J. Tribol. 109 (1987) 37–41, https://doi.org/10.1115/1.3261324.
[24] K. Czołczyński, How to obtain stiffness and damping coefficients of gas bearings, Wear. 201 (1996) 265–275.
[25] Ł. Breńkacz, G. Żywica, Comparison of experimentally and numerically determined dynamic coefficients of the hydrodynamic slide bearings operating in the nonlinear rotating system, in: Proc. ASME Turbo Expo 2017 Turbomach. Tech. Conf. Expo., Charlotte, NC, USA, 2017, pp. 1–12. https://doi.org/10.1115/GT2017-64251.
[26] T.W. Dimond, P.N. Sheth, P.E. Allaire, M. He, Identification methods and test results for tilting pad and fixed geometry journal bearing dynamic coefficients - A review, Shock Vib. 16 (2009) 13–43, https://doi.org/10.3233/SAV-2009-0452.
[28] Y. Ishida, Nonlinear vibrations and chaos in rotordynamics, JSME Int. J. Ser. C, Dyn. Control. Robot. Des. Manuf. 37 (1994) 237–245, https://doi.org/10.1299/jsmec1993.37.237.
[29] W.C. Foiles, P.E. Allaire, E.J. Gunter, Review: rotor balancing, Shock Vib. 5 (1998) 325–336, https://doi.org/10.1155/1998/648518.
[30] ISO 10816-1 Mechanical Vibration - Evaluation of machine vibration by measurements on non-rotating parts - Part 1: General guidelines, (1995).
[31] Y. Zhang, B. Fang, L. Kong, Y. Li, Effect of the ring misalignment on the service characteristics of ball bearing and rotor system, Mech. Mach. Theory. 151 (2020), https://doi.org/10.1016/j.mechmachtheory.2020.103889 103889.
[32] J.T. Sawicki, M.I. Friswell, Z. Kulesza, A. Wroblewski, J.D. Lekki, Detecting cracked rotors using auxiliary harmonic excitation, J. Sound Vib. 330 (2011) 1365–1381, https://doi.org/10.1016/j.jsv.2010.10.006.
[33] S. Stewart, R. Ahmed, Rolling contact fatigue of surface coatings - a review, Wear. 253 (2002) 1132–1144, https://doi.org/10.1016/S0043-1648(02)00234-X.
[34] Y. Wei, Z. Chen, W. Xu, Y. Jiao, Effect analysis of dimensional tolerances on the dynamic characteristics of hydrodynamic journal bearing system, in: Vol. 4B Dyn. Vib. Control, American Society of Mechanical Engineers, 2013, pp. 1–5. https://doi.org/10.1115/IMECE2013-62535.
[35] M.J. Crocker, Handbook of Noise and Vibration Control, John Wiley & Sons, Inc., 2008, https://doi.org/10.1002/9780470209707.
[36] Q. Mao, S. Pietrzko, Control of noise and structural vibration, 2013. https://doi.org/10.1007/978-1-4471-5091-6.
[37] M.M. Khonsari, A review of thermal effects in hydrodynamic bearings. Part II: journal bearings., Tech. Prepr. Present. Asle 41St Annu. Meet. (Toronto, Canada May 12-15, 1986), Park Ridge, U.S.a., Am. So. (1986) 37–41. https://doi.org/10.1080/05698198708981726.
[39] J.T. Sawicki, R.J. Capaldi, M.L. Adams, Experimental and theoretical rotordynamic characteristics of a hybrid journal bearing, J. Tribol. 119 (1997) 132–141, https://doi.org/10.1115/1.2832446.
[40] H. Hirani, P. Samanta, Hybrid (hydrodynamic + permanent magnetic) journal bearings, Proc. Inst. Mech. Eng. Part J J. Eng. Tribol. 221 (2007) 881–891, https://doi.org/10.1243/13506501JET282.
[41] K.P. Lijesh, H. Hirani, Design and development of permanent magneto-hydrodynamic hybrid journal bearing, J. Tribol. 139 (2017), https://doi.org/10.1115/1.4035153.
[42] F. Qin, Y. Li, H. Qi, L. Ju, Advances in compact manufacturing for shape and performance controllability of large-scale components-a review, Chinese J. Mech. Eng. (English Ed. 30 (2017) 7–21, https://doi.org/10.3901/CJME.2016.1102.128.
[43] I.F. Santos, Trends in Controllable Oil Film Bearings, in: 2011: pp. 185–199. https://doi.org/10.1007/978-94-007-0020-8_17.
[44] C. Hansen, S. Snyder, Q. Xiaojun, L. Brooks, D. Moreau, Adaptive Active Control of Noise and Vibration, CRC Press, 2002.
[45] L. Atepor, Vibration analysis and intelligent control of flexible rotor systems using smart materials, 2010. http://theses.gla.ac.uk/593/.
[46] L. Sun, Active Vibration Control of Rotor-Bearing Systems, The University of Melbourne, 1995.
[47] L.R.S. Theisen, Advanced Control of Active Bearings - Modelling, Design and, 2016. http://orbit.dtu.dk/files/126147916/phdthesis.pdf.
[48] P.R.N. Childs, Mechanical Design Engineering Handbook, Elsevier, 2010, https://linkinghub.elsevier.com/retrieve/pii/C20110045295.
[49] D.A. Bies, Feasibility study of a hybrid vibration isolation system, SAE Tech. Pap. (1968) 2916–2926. https://doi.org/10.4271/680751.
[50] Y. Iwata, K. Nonami, Vibration control of rotating shaft with self-optimizing support system, Bull. JSME. 27 (1984) 1306–1311, https://doi.org/10.1299/jsme1958.27.1306.
[51] Y.A. Khulief, Vibration suppression in rotating beams using active modal control, J. Sound Vib. 242 (2001) 681–699, https://doi.org/10.1006/jsvi.2000.3385.
[52] B.H. Rho, K.W. Kim, The effect of active control on stability characteristics of hydrodynamic journal bearings with an axial groove, Proc. Inst. Mech. Eng. Part C J. Mech. Eng. Sci. 216 (2002) 939–946, https://doi.org/10.1177/095440620221600907.
[53] P.E. Allaire, D.W. Lewis, J.D. Knight, Active vibration control of a single mass rotor on flexible supports, J. Franklin Inst. 315 (1983) 211–222, https://doi.org/10.1016/0016-0032(83)90025-X.
[54] A.B. Palazzolo, R.R. Lin, A.F. Kascak, R.M. Alexander, Active control of transient rotordynamic vibration by optimal control methods, J. Eng. Gas Turbines Power. 111 (1989) 264, https://doi.org/10.1115/1.3240246.
[55] L.D. Girard, Application des Surfaces Glissantes, 1863.
[56] W.B. Rowe, D. Koshal, K.J. Stout, Investigation of recessed hydrostatic and slot-entry journal bearings for hybrid hydrodynamic and hydrostatic operation, Wear. 43 (1977) 55–69, https://doi.org/10.1016/0043-1648(77)90043-6.
[57] J.S. Rao, History of Rotating Machinery Dynamics, Springer, Netherlands, Dordrecht, 2011, https://doi.org/10.1007/978-94-007-1165-5.
[58] A.C. Bannwart, K.L. Cavalca, G.B. Daniel, Hydrodynamic bearings modeling with alternate motion, Mech. Res. Commun. 37 (2010) 590–597, https://doi.org/10.1016/j.mechrescom.2010.07.003.
[59] O. Pinkus, The Reynolds centennial: A brief history of the theory of hydrodynamic lubrication., 109 (1986).
[60] Z. Guo, T. Hirano, R.G. Kirk, Application of CFD analysis for rotating machinery: part 1 — hydrodynamic, hydrostatic bearings and squeeze film damper, J. Eng. Gas Turbines Power. 127 (2005) 445–451, https://doi.org/10.1115/1.1807415.
[61] S.A. Morsi, Passively and actively controlled externally pressurized oil-film bearings, J. Lubr. Technol. 94 (1972) 56–63, https://doi.org/10.1115/1.3451635.
[62] I.F. Santos, F.Y. Watanabe, Compensation of cross-coupling stiffness and increase of direct damping in multirecess journal bearings using active hybrid lubrication: Part i-theory, J. Tribol. 126 (2004) 146–155, https://doi.org/10.1115/1.1631015.
[63] M.A. Ahmad, S. Kasolang, R. Dwyer-Joyce, The effects of oil supply pressure at different groove position on frictional force and torque in journal bearing lubrication, Procedia Eng. 68 (2013) 70–76, https://doi.org/10.1016/j.proeng.2013.12.149.
[64] K.P. Gertzos, P.G. Nikolakopoulos, C.A. Papadopoulos, CFD analysis of journal bearing hydrodynamic lubrication by Bingham lubricant, Tribol. Int. 41 (2008) 1190–1204, https://doi.org/10.1016/j.triboint.2008.03.002.
[65] N. Marx, L. Fernández, F. Barceló, H. Spikes, Shear thinning and hydrodynamic friction of viscosity modifier-containing oils. Part II: Impact of shear thinning on journal bearing friction, Tribol. Lett. 66 (2018) 91, https://doi.org/10.1007/s11249-018-1040-z.
[66] J. Hesselbach, C. Abel-Keilhack, Active hydrostatic bearing with magnetorheological fluid, J. Appl. Phys. 93 (2003) 8441–8443, https://doi.org/10.1063/1.1555850.

[67] K. Tamboli, K. Athre, Experimental investigations on water lubricated hydrodynamic bearing, Procedia Technol. 23 (2016) 68–75, https://doi.org/10.1016/j.protcy.2016.03.071.
[68] X. Liang, X. Yan, W. Ouyang, Z. Liu, Experimental research on tribological and vibration performance of water-lubricated hydrodynamic thrust bearings used in marine shaft-less rim driven thrusters, Wear. 426–427 (2019) 778–791, https://doi.org/10.1016/j.wear.2018.11.017.
[69] P.D. Kulkarni, V.M. Phalle, Influence of turbulent flow on performance of fluid film journal bearing – overview, SSRN Electron. J. (2018), https://doi.org/10.2139/ssrn.3347085.
[70] S.M. Zakharov, Hydrodynamic lubrication research: current situation and future prospects, J. Frict. Wear. 31 (2010) 56–67, https://doi.org/10.3103/s106836661001006x.
[71] M. Wodtke, Hydrodynamiczne łożyska wzdłużne z warstwą ślizgową z PEEK, Wydawnictwo Politechniki Gdańskiej, 2017.
[72] S.I. Chernyshenko, P. Constantin, J.C. Robinson, E.S. Titi, A posteriori regularity of the three-dimensional Navier-Stokes equations from numerical computations, J. Math. Phys. 48 (2007), https://doi.org/10.1063/1.2372512.
[73] O. Reynolds, I. On the theory of lubrication and its application to Mr. Beauchamp tower's experiments, including an experimental determination of the viscosity of olive oil, Proc. R. Soc. London. 40 (1886) 191–203, https://doi.org/10.1098/rspl.1886.0021.
[74] P.V. Dang, S. Chatterton, P. Pennacchi, The effect of the pivot stiffness on the performances of five-pad tilting pad bearings, Lubricants. 7 (2019) 61, https://doi.org/10.3390/lubricants7070061.
[75] X. Tong, A. Palazzolo, J. Suh, Areview of the rotordynamic thermally induced synchronous instability (Morton) effect, Appl. Mech. Rev. 69 (2017), https://doi.org/10.1115/1.4037216.
[76] P.V. Dang, S. Chatterton, P. Pennacchi, A. Vania, Effect of the load direction on non-nominal five-pad tilting-pad journal bearings, Tribol. Int. 98 (2016) 197–211, https://doi.org/10.1016/j.triboint.2016.02.028.
[77] D.S. Alves, M.F. Wu, K.L. Cavalca, Application of gain-scheduled vibration control to nonlinear journal-bearing supported rotor, J. Sound Vib. 442 (2019) 714–737, https://doi.org/10.1016/j.jsv.2018.11.027.
[78] W.U.R. Rehman, Y. Luo, Y. Wang, G. Jiang, N. Iqbal, S.U.R. Rehman, S. Bibi, Fuzzy logic–based intelligent control for hydrostatic journal bearing, Meas. Control (United Kingdom) 52 (2019) 229–243, https://doi.org/10.1177/0020294019830110.
[79] P. Ferfecki, J. Zapoměl, Reducing excessive vibration of rigid rotors mounted with hydrodynamic bearings by controlled excitation of the rotor supports, 2012.
[80] B.H. Rho, K.W. Kim, A study of the dynamic characteristics of synchronously controlled hydrodynamic journal bearings, Tribol. Int. 35 (2002) 339–345, https://doi.org/10.1016/S0301-679X(02)00025-7.
[81] A. Muszynska, Whirl and whip-Rotor/bearing stability problems, J. Sound Vib. 110 (1986) 443–462, https://doi.org/10.1016/S0022-460X(86)80146-8.
[82] A.H. Pesch, J.T. Sawicki, Stabilizing hydrodynamic bearing oil whip with μ-synthesis control of an active magnetic bearing, in: ASME International, 2015: p. V07AT31A029. https://doi.org/10.1115/gt2015-44059.
[83] K.P. Lijesh, H. Harish, P. Samanta, Theoretical and experimental study for hybrid journal bearing, Int. J. Sci. Eng. Res. 6 (2015) 133–139. https://doi.org/10.14299/ijser.2015.02.002.
[84] H. Hirani, K. Athre, S. Biswas, Dynamic analysis of engine bearings, Int. J. Rotating Mach. 5 (1999) 283–293.
[85] M.K. Ghosh, M.R. Satish, Rotordynamic characteristics of multilobe hybrid bearings with short sills-part I, Tribol. Int. 36 (2003) 625–632, https://doi.org/10.1016/S0301-679X(03)00006-9.
[86] M.K. Ghosh, M.R. Satish, Stability of multilobe hybrid bearing with short sills - Part II, Tribol. Int. 36 (2003) 633–636, https://doi.org/10.1016/S0301-679X(03)00007-0.
[87] M.K. Ghosh, A. Nagraj, Rotordynamic characteristics of a multilobe hybrid journal bearing in turbulent lubrication, Proc. Inst. Mech. Eng. Part J J. Eng. Tribol. 218 (2004) 61–67.
[88] M.L. Adams, Bearings, CRC Press, Boca Raton: CRC Press, 2017., 2018. https://doi.org/10.1201/b22177.
[89] B.W. Rowe, Hydrostatic, Aerostatic and Hybrid Bearing Design, Elsevier, 2012, https://doi.org/10.1016/C2011-0-07331-3.
[90] P. Kytka, C. Ehmann, R. Nordmann, Active vibration damping of a flexible structure in hydrostatic bearings, IFAC Proc. 39 (2006) 656–661, https://doi.org/10.3182/20060912-3-DE-2911.00114.
[91] P. Kytka, C. Ehmann, R. Nordmann, Active vibration μ-synthesis-control of a hydrostatically supported flexible beam, J. Mech. Sci. Technol. 21 (2007) 924–929, https://doi.org/10.1007/BF03027070.
[92] B.-H. Rho, K.-W. Kim, A study on stability characteristics of actively controlled hydrodynamic journal bearings, JSME Int. J. Ser. C. 45 (2004) 239–245, https://doi.org/10.1299/jsmec.45.239.
[93] I. Santos, Controllable sliding bearings and controllable lubrication principles—an overview, Lubricants. 6 (2018) 16, https://doi.org/10.3390/lubricants6010016.
[94] N.V. Borse, A.M. Parkar, S.P. Chippa, Analysis of hydrodynamic journal bearing including thermal effect, SSRN Electron. J. (2018), https://doi.org/10.2139/ssrn.3313911.
[95] A.K. Gangrade, V.M. Phalle, S.S. Mantha, Stability analysis of various lengths conical hydrodynamic bearing for variable load conditions, SSRN Electron. J. (2018), https://doi.org/10.2139/ssrn.3331447.
[96] Z. Guo, T. Hirano, R.G. Kirk, Application of CFD analysis for rotating machinery: part 1 — hydrodynamic, hydrostatic bearings and squeeze film damper, Vol. 4 Turbo Expo 2003. 127 (2003) 651–659. https://doi.org/10.1115/GT2003-38931.
[97] X. Ma, W. Xu, X. Zhang, F. Yang, Effect of form errors on oil film characteristics of hydrodynamic journal bearings based on small displacement torsor theory, Ind. Lubr. Tribol. 71 (2019) 426–439, https://doi.org/10.1108/ILT-05-2017-0140.
[98] K. Bobzin, M. Öte, T. Königstein, W. Wietheger, T. Schröder, G. Jacobs, D. Bosse, New material concepts for thermally sprayed hydrodynamic bearings, J. Therm. Spray Technol. 28 (2019) 305–313, https://doi.org/10.1007/s11666-018-0822-z.
[99] S. Tohma, T. Isogai, T. Hirayama, T. Matsuoka, K. Yokozuka, S. Mori, Frequency analysis of hard disk drive spindle system supported by hydrodynamic bearings, J. Adv. Mech. Des. Syst. Manuf. 1 (2007) 717–725, https://doi.org/10.1299/jamdsm.1.717.
[100] T. Asada, H. Saitou, D. Itou, Design of hydrodynamic bearing for miniature hard disk drives, IEEE Trans. Magn. 43 (2007) 3721–3726, https://doi.org/10.1109/TMAG.2007.902978.
[101] T. Asada, H. Saitou, Y. Asaida, K. Itoh, Characteristic analysis of hydrodynamic bearings for HDDs, 2000 Asia-Pacific Magn. Rec. Conf. - Dig. APMRC 2000 Mech. Manuf. Asp. HDD. 37 (2000) MA6/1–MA6/2. https://doi.org/10.1109/APMRC.2000.898903.
[102] G.H. Jang, K.S. Kim, H.S. Lee, C.S. Kim, Analysis of a hydrodynamic bearing of a HDD spindle motor at elevated temperature, J. Tribol. 126 (2004) 353–359, https://doi.org/10.1115/1.1611500.
[103] D.Q. Zhang, S.X. Chen, Z.J. Liu, Design of a hybrid fluid bearing system for HDD spindles, IEE Trans. Magn. 3 (1999) 1–6.
[104] J.Y. Juang, D.B. Bogy, C.S. Bhatia, Design and dynamics of flying height control slider with piezoelectric nanoactuator in hard disk drives, J. Tribol. 129 (2007) 161–170, https://doi.org/10.1115/1.2401208.
[105] D. Childs, K. Hale, A test apparatus and facility to identify the rotordynamic coefficients of high-speed hydrostatic bearings, J. Tribol. 116 (1994) 337–343, https://doi.org/10.1115/1.2927226.
[106] Z. Guoyuan, Y. Xiu-Tian, Analysis of two phase flow in liquid oxygen hybrid journal bearings for rocket engine turbopumps, Ind. Lubr. Tribol. 66 (2014) 31–37, https://doi.org/10.1108/ILT-09-2011-0072.
[107] M. Benadda, A. Bouzidane, M. Thomas, R. Guilbault, Dynamic behavior analysis of a rigid rotor supported by hydrostatic squeeze film dampers compensated with new electrorheological valve restrictors, Ind. Lubr. Tribol. (2019), https://doi.org/10.1108/ILT-06-2019-0226.
[108] K. Becker, W. Seemann, Stability investigations of an elastic rotor supported by actively deformed journal bearings considering the associated spectral system, Open Arch. 17th Int. Symp. Transp. Phenom. Dyn. Rotating Mach. ISROMAC 2017, 2017.

[109] K. Becker, W. Seemann, A journal bearing with actively modified geometry for extending the parameter-based stability range of rotor-dynamic systems, Open Arch. 16th Int. Symp. Transp. Phenom. Dyn. Rotating Mach. ISROMAC 2016, 2019.
[110] B. Pfau, M. Rieken, R. Markert, Numerische Untersuchungen eines verstellbaren Gleitlagers zur Unter- drückung von Instabilitäten mittels Parameter-Antiresonanzen Einleitung Modellierung, (n.d.).
[111] H. Ulbrich, J. Althaus, Actuator design for rotor control, Other Sources, 1989
[112] C. Carmignani, P. Forte, E. Rustighi, Active control of rotor vibrations by means of piezoelectric actuators, Roceedings DETC ' 01, Pittsburgh. (2001) 1–8. https://eprints.soton.ac.uk/355251/.
[113] A.H. Marcinkevičius, Hydrodynamic tilting pad journal bearing with automatic control, Arch. Mech. Eng. 57 (2010) 343–354, https://doi.org/10.2478/v10180-010-0019-6.
[114] A. Chasalevris, F. Dohnal, Improving stability and operation of turbine rotors using adjustable journal bearings, Tribol. Int. 104 (2016) 369–382, https://doi.org/10.1016/j.triboint.2016.06.022.
[115] R. Pai, D.W. Parkins, Performance characteristics of an innovative journal bearing with adjustable bearing elements, J. Tribol. 140 (2018) 041705-1-041705-11. https://doi.org/10.1115/1.4039134.
[116] J.M. Krodkiewski, G.J. Davies, Modelling a new three-pad active bearing, in: Vol. 6 Turbo Expo 2004, ASME, 2004: pp. 799–808. https://doi.org/10.1115/GT2004-54322.
[117] J.M. Krodkiewski, H. Song, F. Chen, Passive and active control of vibrations of a rotor system by means of an oil bearing with flexible sleeves, In: Proceedings of the 7th IFToMM Conference on Rotor Dynamics, eds. H. Springer, H. Ecker, Vienna 2006, pp. 1, (2006) 2006.
[118] I.F. Santos, F.H. Russo, Tilting-pad journal bearings with electronic radial oil injection, J. Tribol. 120 (1998) 583, https://doi.org/10.1115/1.2834591.
[119] J.M. Krodkiewski, Y. Cen, L. Sun, Improvement of stability of rotor system by introducing a hydraulic damper into an active journal bearing, Int. J. Rotating Mach. 3 (1997) 45–52, https://doi.org/10.1155/S1023621X97000055.
[120] L. Sun, J.M. Krodkiewski, Y. Cen, Self-tuning adaptive control of forced vibration in rotor systems using an active journal bearing, J. Sound Vib. 213 (1998) 1–14, https://doi.org/10.1006/jsvi.1997.1466.
[121] D.C. De Moraes, R. Nicoletti, Hydrodynamic bearing with electromagnetic actuators: rotor vibration control and limitations, 2010.
[122] A. Chasalevris, F. Dohnal, Vibration quenching in a large scale rotor-bearing system using journal bearings with variable geometry, J. Sound Vib. 333 (2014) 2087–2099, https://doi.org/10.1016/j.jsv.2013.11.034.
[123] A. Chasalevris, F. Dohnal, A journal bearing with variable geometry for the suppression of vibrations in rotating shafts: simulation, design, construction and experiment, Mech. Syst. Signal Process. 52–53 (2015) 506–528, https://doi.org/10.1016/j.ymssp.2014.07.002.
[124] A. Chasalevris, F. Dohnal, Modal interaction and vibration suppression in industrial turbines using adjustable journal bearings, J. Phys. Conf. Ser. 744 (2016), https://doi.org/10.1088/1742-6596/744/1/012156.
[125] S. Morosi, I.F. Santos, Experimental Investigations of Active Air Bearings, in: Vol. 7 Struct. Dyn. Parts A B, ASME, 2012: pp. 1–10. https://doi.org/10.1115/GT2012-68766.
[126] I.F. Santos, A. Scalabrin, Control system design for active lubrication with theoretical and experimental examples, J. Eng. Gas Turbines Power. 125 (2003) 75, https://doi.org/10.1115/1.1451757.
[127] M. De Queiroz, An active hydrodynamic bearing for controlling self-excited vibrations: theory and simulation, JVC/Journal Vib. Control. 19 (2013) 2211–2222, https://doi.org/10.1177/1077546312458945.
[128] W.X. Wu, F. Pfeiffer, Active vibration damping for rotors by a controllable oil-film bearing, in: H. Irretier (Ed.), Proc. Fifth Int. Conf. Rotor Dyn., Darmstadt, 1998, pp. 431–442.
[129] Y.K. Wang, C.D. Mote, Active and passive vibration control of an axially moving beam by smart hybrid bearings, J. Sound Vib. 195 (1996) 575–584, https://doi.org/10.1006/jsvi.1996.0446.
[130] D.E. Bently, J.W. Grant, P.C. Hanifan, Active controlled hydrostatic bearings for a new generation of machines, Proc. ASME Turbo Expo. 2 (2000) 1–9, https://doi.org/10.1115/2000-GT-0354.
[131] S. Zhang, Y. Xing, H. Xu, S. Pei, L. Zhang, An experimental study on vibration suppression of adjustable elliptical journal bearing-rotor system in various vibration states, Mech. Syst. Signal Process. 141 (2020), https://doi.org/10.1016/j.ymssp.2019.106477 106477.
[132] M.-C. Shih, J.-S. Shie, Recess design and dynamic control of an active compensating hydrostatic bearing, J. Adv. Mech. Des. Syst. Manuf. 7 (2013) 706–721, https://doi.org/10.1299/jamdsm.7.706.
[133] T.A. Osman, G.S. Nada, Z.S. Safar, Static and dynamic characteristics of magnetized journal bearings lubricated with ferrofluid, Tribol. Int. 34 (2001) 369–380, https://doi.org/10.1016/S0301-679X(01)00017-2.
[134] M. Säynätjoki, K. Holmberg, Magnetic fluids in sealing and lubrication – a state of the art review, J. Synth. Lubr. 10 (1993) 119–132, https://doi.org/10.1002/jsl.3000100203.
[135] R.E. Rosensweig, R. Kaiser, G. Miskolczy, Viscosity of magnetic fluid in a magnetic field, J. Colloid Interface Sci. 29 (1969) 680–686, https://doi.org/10.1016/0021-9797(69)90220-3.
[136] N.S. Patel, D. Vakharia, G. Deheri, Hydrodynamic journal bearing lubricated with a ferrofluid, Ind. Lubr. Tribol. 69 (2017) 754–760, https://doi.org/10.1108/ILT-08-2016-0179.
[137] N. Tipei, Theory of lubrication with ferrofluids: Application to short bearings, J. Tribol. 104 (1982) 510–515, https://doi.org/10.1115/1.3253274.
[138] D. Deckler, R. Veillette, M. Braun, F. Choy, Simulation and control of an active tilting-pad journal bearing, Tribol. Trans. 47 (2004) 440–458, https://doi.org/10.1080/05698190490463277.
[139] J.G. Salazar, I.F. Santos, Active tilting-pad journal bearings supporting flexible rotors: Part I - The hybrid lubrication, Tribol. Int. 107 (2017) 94–105, https://doi.org/10.1016/j.triboint.2016.11.018.
[140] J.G. Salazar, I.F. Santos, Active tilting-pad journal bearings supporting flexible rotors: Part II–The model-based feedback-controlled lubrication, Tribol. Int. 107 (2017) 106–115, https://doi.org/10.1016/j.triboint.2016.11.019.
[141] R. Snoeys, Development of improved externally pressurized gas bearings, I (1987) 81–88.
[142] M.A. Barnett, A. Silver, Application of Air Bearings to High-Speed Turbomachinery, in: SAE Tech. Pap., 1970. https://doi.org/10.4271/700720.
[143] N. Wang, H.C. Huang, C.R. Hsu, Parallel optimum design of foil bearing using particle swarm optimization method, Tribol. Trans. 56 (2013) 453–460, https://doi.org/10.1080/10402004.2012.758334.
[144] L. San Andrés, J. Norsworthy, Structural and rotordynamic force coefficients of a shimmed bump foil bearing: An Assessment of a Simple Engineering Practice, in: Vol. 7A Struct. Dyn., ASME, 2015: p. V07AT31A023. https://doi.org/10.1115/GT2015-43734.
[145] T. Waumans, J. Peirs, F. Al-Bender, D. Reynaerts, Aerodynamic journal bearing with a flexible, damped support operating at 7.2 million DN, J. Micromech. Microeng. 21 (2011), https://doi.org/10.1088/0960-1317/21/10/104014.
[146] W.A. Gross, A review of developments in externally pressurized gas bearing technology since 1959, J. Tribol. 91 (1969) 161–165, https://doi.org/10.1115/1.3554848.
[147] L.R.S. Theisen, H.H. Niemann, R. Galeazzi, I.F. Santos, Enhancing damping of gas bearings using linear parameter-varying control, J. Sound Vib. 395 (2017) 48–64, https://doi.org/10.1016/j.jsv.2017.02.021.
[148] G. Aguirre, F. Al-Bender, H. Van Brussel, A multiphysics model for optimizing the design of active aerostatic thrust bearings, Precis. Eng. 34 (2010) 507–515, https://doi.org/10.1016/j.precisioneng.2010.01.004.
[149] K. Ryu, Hybrid Gas Bearings With Controlled Supply Pressure to Eliminate Rotor Vibrations While Crossing System Critical Speeds, 2007. https://doi.org/10.1115/1.2966391.
[150] F. Al-Bender, On the modelling of the dynamic characteristics of aerostatic bearing films: from stability analysis to active compensation, Precis. Eng. 33 (2009) 117–126, https://doi.org/10.1016/j.precisioneng.2008.06.003.

[151] H.M. Talukder, T.B. Stowell, Pneumatic hammer in an externally pressurized orifice-compensated air journal bearing, Tribol. Int. 36 (2003) 585–591, https://doi.org/10.1016/S0301-679X(02)00247-5.
[152] E. Blondeel, R. Snoeys, L. Devrieze, Dynamic stability of externally pressurized gas bearings, J. Lubr. Technol. 102 (2009) 511, https://doi.org/10.1115/1.3251588.
[153] B.J. Hamrock, Fundamentals Fluid Film Lubrication of, Nasa Publ. 1255 (1991) 301–318.
[154] R. Beck, Bearing Design in Machinery: Engineering Tribology and Lubrication, Dekker Mechanical Engineering, 2003.
[155] C. Dellacorte, Oil-Free Enabling Technology: Gas Foil Bearings, 2018. https://ntrs.nasa.gov/archive/nasa/casi.ntrs.nasa.gov/20180004646.pdf.
[156] K. Sim, D. Kim, Design of flexure pivot tilting pads gas bearings for high-speed oil-free microturbomachinery, J. Tribol. 129 (2007) 112, https://doi.org/10.1115/1.2372763.
[157] F.Y. Zeidan, D.J. Paquette, Application of high speed and high performance fluid film bearings in rotating machinery, Proc. 23rd Turbomach. Symp. (1994) 209–234.
[158] L. San Andres, Turbulent flow, flexure-pivot hybrid bearings for cryogenic applications, J. Tribol. 118 (1996) 190, https://doi.org/10.1115/1.2837077.
[159] T. Kwon, J. Qiu, J. Tani, Control of self-excited vibration of a rotor system with active gas bearing, Trans. Japan Soc. Mech. Eng. Ser. C. 66 (2000) 724–730, https://doi.org/10.1299/kikaic.66.724.
[160] K. Sim, D. Kim, Thermohydrodynamic analysis of compliant flexure pivot tilting pad gas bearings, J. Eng. Gas Turbines Power. 130 (2008), https://doi.org/10.1115/1.2836616 032502.
[161] L. San Andrés, Hybrid flexure pivot-tilting pad gas bearings: analysis and experimental validation, J. Tribol. 128 (2006) 551, https://doi.org/10.1115/1.2194918.
[162] A. Shimokohbe, H. Aoyama, An active air bearing: a controlled-type bearing with ultra-precision, infinite static stiffness, high damping capability and new functions, Nanotechnology. 2 (1991) 64–71, https://doi.org/10.1088/0957-4484/2/1/009.
[163] O. Horikawa, K. Sato, A. Shimokohbe, An active air journal bearing, Nanotechnology. 3 (1992) 84–90, https://doi.org/10.1088/0957-4484/3/2/006.
[164] S. Hara, T. Omata, M. Nakano, Synthesis of repetitive control systems and its application, Proc. 24th Conf. Decis. Control. (1985) 1387–1392.
[165] G. Pipeleers, B. Demeulenaere, F. Al-bender, J. De Schutter, J. Swevers, Optimal performance tradeoffs in repetitive control : experimental validation, Control. 17 (2009) 970–979.
[166] H. Mizumoto, S. Arii, Y. Kami, K. Goto, T. Yamamoto, M. Kawamoto, Active inherent restrictor for air-bearing spindles, Precis. Eng. 19 (2002) 141–147, https://doi.org/10.1016/s0141-6359(96)00041-4.
[167] Y. Sato, K. Maruta, M. Harada, Dynamic characteristics of hydrostatic thrust air bearing with actively controlled restrictor, J. Tribol. 110 (2009) 156, https://doi.org/10.1115/1.3261556.
[168] F.G. Pierart, I.F. Santos, Active lubrication applied to radial gas journal bearings. Part 2: modelling improvement and experimental validation, Tribol. Int. 96 (2016) 237–246, https://doi.org/10.1016/j.triboint.2015.12.004.
[169] S. Morosi, I.F. Santos, Active lubrication applied to radial gas journal bearings. Part 1: modeling, Tribol. Int. 44 (2011) 1949–1958, https://doi.org/10.1016/j.triboint.2011.08.007.
[170] S. Morosi, From Hybrid to Actively-Controlled Gas Lubricated Bearings – Theory and Experiment PhD, Technical University of Denmark, 2011.
[171] C.D. Near, Piezoelectric actuator technology, in: I. Chopra (Ed.), Symp. Smart Struct. Mater., 1996: pp. 246–258. https://doi.org/10.1117/12.239027.
[172] A.K. Sekunda, H.H. Niemann, N.K. Poulsen, I.F. Santos, Closed loop identification of a piezoelectrically controlled radial gas bearing: theory and experiment, Proc. Inst. Mech. Eng. Part I J. Syst. Control Eng. 232 (2018) 926–936, https://doi.org/10.1177/0959651818769230.
[173] G.W. Russell, Air bearing control system, (1994).
[174] G. Belforte, R. Relli, Analusis of steady and transient characteristics of pneumatic controlled air bearing. Department of Mechanics , Politecnico di Torino C . so Duca degli Abruzzi , 24-10129-Torino-Italy a : D : dB : ex : F : g : Pocket width Bearing ' s inlet orifice diamet, (2002) 699–704.
[175] T. Raparelli, V. Viktorov, A. Manuello Bertetto, A. Trivella, Air bearing with pneumatic active control, AIMETA Int. Tribol. Conf. (2000) 693–700.
[176] T. Raparelli, V. Viktorov, F. Colombo, L. Lentini, Aerostatic thrust bearings active compensation: critical review, Precis. Eng. 44 (2016) 1–12, https://doi.org/10.1016/j.precisioneng.2015.11.002.
[177] F.G. Pierart, I.F. Santos, Lateral vibration control of a flexible overcritical rotor via an active gas bearing – Theoretical and experimental comparisons, J. Sound Vib. 383 (2016) 20–34, https://doi.org/10.1016/j.jsv.2016.07.024.
[178] Y. Lihua, S. Yanhua, Y. Lie, Active control of unbalance response of rotor systems supported by tilting-pad gas bearings, Proc. Inst. Mech. Eng. Part J J. Eng. Tribol. 226 (2012) 87–98, https://doi.org/10.1177/1350650111412867.
[179] G. Schweitzer, E.H. Maslen, Magnetic bearings: theory, design, and application to rotating machinery, 2009. https://doi.org/10.1007/978-3-642-00497-1.
[180] H. Habermann, G. Liard, An active magnetic bearing system, Tribol. Int. 13 (1980) 85, https://doi.org/10.1016/0301-679X(80)90021-3.
[181] D. Wajnert, Charakterystyki pracy łożyska magnetycznego z wuzględnieniem jego układu regulacji, Politechnika Opolska, Opole, 2012.
[182] A. Piłat, Systemy aktywnej lewitacji magnetycznej, Pomiary Autom. Robot. (2011) 146–149.
[183] R. Nordmann, Vibration control and failure diagnosis in rotating machinery by means of active magnetic bearings, in: CISM Int. Cent. Mech. Sci. Courses Lect., 2014, pp. 301–311. https://doi.org/10.1007/978-3-7091-1821-4_7.
[184] J.W. Beams, J.L. Young, J.W. Moore, The production of high centrifugal fields, J. Appl. Phys. 17 (1946) 886–890, https://doi.org/10.1063/1.1707658.
[185] G. Schweitzer, Active magnetic bearings - chances and limitations, in: Int. Cent. Magn. Bear., 2002.
[186] K. Sim, Y.B. Lee, J.W. Song, J.B. Kim, T.H. Kim, Identification of the dynamic performance of a gas foil journal bearing operating at high temperatures, J. Mech. Sci. Technol. 28 (2014) 43–51, https://doi.org/10.1007/s12206-013-0945-6.
[187] T. Mizuno, A unified transfer function approach to control design for virtually zero power magneticsuspension, in: Proc. 7th Internat. Symp. Magn. Bear., 2000, pp. 117–123.
[188] T. Mizuno, T. Huguch, Experimental measurement of rotational losses in magnetic bearings, in: Proc. 4th Internat. Symp. Magn. Bear., ETH Zurich, 1994, pp. 591–595.
[189] P.E. Allaire, M.E.F. Kasarda, L.K. Fujita, Rotor power losses in planar radial magnetic bearings—effects of number of stator poles, air gap thickness, and magnetic flux density, J. Eng. Gas Turbines Power. 121 (1999) 691–696, https://doi.org/10.1115/1.2818528.
[190] J. Liu, T. Koseki, 3 degrees of freedom control of semi-zero-power magnetic levitation suitable for two-dimensional linear motor, 2001. https://doi.org/10.1109/ICEMS.2001.971842.
[191] J.K. Fremerey, Radial Shear Force Permanent Magnet Bearing System with Zero-Power Axial Control and Passive Radial Damping BT - Magnetic Bearings, in: G. Schweitzer (Ed.), Springer Berlin Heidelberg, Berlin, Heidelberg, 1989: pp. 25–31.
[192] D. Meeker, E. Maslen, M. Kasarda, Influence of actuator geometry on rotating losses in heteropolar magnetic bearings, (n.d.).
[193] M. Ahrens, L. Kucera, Analytical calculation of fields, forces and losses of a radial magnetic bearing with a rotating rotor considering eddy currents, Proc. 5th Internat. Symp. Magn. Bear. (1996) 28–30.
[194] M. Mack, Luftreibungsverluste bei elektrischen Maschinen kleiner Baugrössen, 3rd ed., Stuttgart, 1967.
[195] M. Brito, Magnetic bearings, Springer, Berlin, Heidelberg, 2009, https://doi.org/10.1007/978-3-642-00497-1.
[196] A. Pilat, Analytical modeling of active magnetic bearing geometry, Appl. Math. Model. 34 (2010) 3805–3816, https://doi.org/10.1016/J.APM.2010.03.021.
[197] Z. Gosiewski, K. Falkowski, Multifunctional Magnetic Bearings, in: BNIL, Warszawa, 2003.
[198] A. Chiba, F. Tadashi, O. Ichikawa, Magnetic Bearings and Bearingless Drives, Elsevier, 2005.
[199] R. Larsonneur, Design and control of active magnetic bearing systems for high speed rotation, (1990) 63–78. http://e-collection.library.ethz.ch/view/eth:22233.

[200] H. Fujiwara, O. Matsushita, Stability evaluation of high frequency eigen modes for activemagnetic bearing rotors, in: Proc. 7th Internat. Symp. Magn. Bear., 2000, pp. 83–88.
[201] Y. Li, W. Li, Y. Lu, Computer-aided simulation analysis of a novel structure hybrid magnetic bearing, IEEE Trans. Magn. 44 (2008) 2283–2287, https://doi.org/10.1109/TMAG.2008.2000542.
[202] X. Liu, J. Dong, Y. Du, K. Shi, L. Mo, Design and static performance analysis of a novel axial hybrid magnetic bearing, IEEE Trans. Magn. 50 (2014), https://doi.org/10.1109/TMAG.2014.2327165.
[203] P. Kurnyta-Mazurek, M. Henzel, A. Kurnyta, Analiza Metody sterowania predykcyjnego dla aktywnego zawieszenia magnetycznego, Res. Work. Air Force Inst. Technol. 37 (2016) 183–194, https://doi.org/10.1515/afit-2015-0033.
[204] W. Zhang, H. Zhu, Radial magnetic bearings: an overview, Results Phys. 7 (2017) 3756–3766, https://doi.org/10.1016/J.RINP.2017.08.043.
[205] K. Hijikata, S. Kobayashi, M. Takemoto, Y. Tanaka, A. Chiba, T. Fukao, Basic characteristics of an active thrust magnetic bearing with a cylindrical rotor core, IEEE Trans. Magn. 44 (2008) 4167–4170, https://doi.org/10.1109/TMAG.2008.2002628.
[206] J. Ahn, C. Han, C. Kim, C. Park, J. Choi, Design of hybrid thrust Magnetic bearing for heavy rotating shaft considering self-weight compensation according to axial load, in: 2017 IEEE Int. Magn. Conf., IEEE, 2017: pp. 1–1. https://doi.org/10.1109/INTMAG.2017.8007919.
[207] W. Zhang, H. Zhu, Precision modeling method specifically for AC magnetic bearings, IEEE Trans. Magn. 49 (2013) 5543–5553, https://doi.org/10.1109/TMAG.2013.2252358.
[208] H. Sheh Zad, T.I. Khan, I. Lazoglu, Design and adaptive sliding-mode control of hybrid magnetic bearings, IEEE Trans. Ind. Electron. 65 (2018) 2537–2547, https://doi.org/10.1109/TIE.2017.2739682.
[209] S.M. Darbandi, M. Behzad, H. Salarieh, H. Mehdigholi, Linear output feedback control of a three-pole magnetic bearing, IEEE/ASME Trans. Mechatron. 19 (2014) 1323–1330, https://doi.org/10.1109/TMECH.2013.2280594.
[210] S. Xu, J. Sun, Decoupling structure for heteropolar permanent magnet biased radial magnetic bearing with subsidiary air-gap, IEEE Trans. Magn. 50 (2014), https://doi.org/10.1109/TMAG.2014.2312396.
[211] B. Han, Q. Xu, Q. Yuan, Multiobjective optimization of a combined radial-axial magnetic bearing for magnetically suspended compressor, IEEE Trans. Ind. Electron. 63 (2016) 2284–2293, https://doi.org/10.1109/TIE.2015.2509905.
[212] W. Zhang, H. Zhu, Improved model and experiment for AC-DC three-degree-of-freedom hybrid magnetic bearing, IEEE Trans. Magn. 49 (2013) 5554–5565, https://doi.org/10.1109/TMAG.2013.2271754.
[213] W. Zhang, H. Zhu, Z. Yang, X. Sun, Y. Yuan, Nonlinear model analysis and "switching model" of AC-DC three-degree-of-freedom hybrid magnetic bearing, IEEE/ASME Trans. Mechatronics. 21 (2016) 1102–1115, https://doi.org/10.1109/TMECH.2015.2463676.
[214] J. Yu, C. Zhu, A multifrequency disturbances identification and suppression method for the self-sensing AMB rotor system, IEEE Trans. Ind. Electron. 65 (2018) 6382–6392, https://doi.org/10.1109/TIE.2017.2784340.
[215] S. Zheng, H. Li, B. Han, J. Yang, Power consumption reduction for magnetic bearing systems during torque output of control moment gyros, IEEE Trans. Power Electron. 32 (2017) 5752–5759, https://doi.org/10.1109/TPEL.2016.2608660.
[216] K. Kang, A. Palazzolo, Homopolar magnetic bearing saturation effects on rotating machinery vibration, IEEE Trans. Magn. 48 (2012) 1984–1994, https://doi.org/10.1109/TMAG.2012.2182776.
[217] J. Sun, Z. Ju, C. Peng, Y. Le, H. Ren, A novel 4-DOF hybrid magnetic bearing for DGMSCMG, IEEE Trans. Ind. Electron. 64 (2017) 2196–2204, https://doi.org/10.1109/TIE.2016.2626238.
[218] J. Cao, Q. Chen, Decoupling control for a 5-DoF rotor supported by active magnetic bearings, in: Sixth Int. Conf. Electr. Mach. Syst. 2003. ICEMS 2003., 2003, pp. 477–480 vol.2.
[219] C. Toh, S. Chen, Development and experimental test of hybrid magnetic bearing for ring-type flywheel, 2015 IEEE Int. Magn. Conf. INTERMAG 2015. (2015) 45106. https://doi.org/10.1109/INTMAG.2015.7156897.
[220] W. Zhang, H. Zhu, Control System design for a five-degree-of-freedom electrospindle supported with AC hybrid magnetic bearings, IEEE/ASME Trans. Mechatron. 20 (2015) 2525–2537, https://doi.org/10.1109/TMECH.2014.2387151.
[221] Q. Li, S. Yin, L. Wan, J. Duan, Stability analysis and controller design for a magnetic bearing with 5 degree of freedoms, Proc. World Congr. Intell. Control Autom. 2 (2006) 8015–8019, https://doi.org/10.1109/WCICA.2006.1713533.
[222] T. Baumgartner, J.W. Kolar, Multivariable state feedback control of a 500 000-r/min self-bearing permanent-magnet motor, IEEE/ASME Trans. Mechatronics. 20 (2015) 1149–1159, https://doi.org/10.1109/TMECH.2014.2323944.
[223] S. Zheng, B. Han, Y. Wang, J. Zhou, Optimization of damping compensation for a flexible rotor system with active magnetic bearing considering gyroscopic effect, IEEE/ASME Trans. Mechatron. 20 (2015) 1130–1137, https://doi.org/10.1109/TMECH.2014.2344664.
[224] L. Chen, C. Zhu, Z. Zhong, M. Sun, W. Zhao, Internal model control for the AMB high-speed flywheel rotor system based on modal separation and inverse system method, IET Electr. Power Appl. 13 (2019) 349–358, https://doi.org/10.1049/iet-epa.2018.5646.
[225] M. Kasarda, An Overview of Active Magnetic Bearing Technology and Applications, 2000. https://doi.org/10.1177/058310240003200201.
[226] S. Basaran, S. Sivrioglu, Novel repulsive magnetic bearing flywheel system with composite adaptive control, IET Electr. Power Appl. 13 (2019) 676–685, https://doi.org/10.1049/iet-epa.2018.5312.
[227] M. Konrath, J. Gorenflo, N. Hübner, H. Nirschl, Application of magnetic bearing technology in high-speed centrifugation, Chem. Eng. Sci. 147 (2016) 65–73, https://doi.org/10.1016/J.CES.2016.03.025.
[228] R. Siva Srinivas, R. Tiwari, C. Kannababu, Application of active magnetic bearings in flexible rotordynamic systems – A state-of-the-art review, Mech. Syst. Signal Process. 106 (2018) 537–572, https://doi.org/10.1016/j.ymssp.2018.01.010.
[229] D.J. Clark, M.J. Jansen, G.T. Montague, An overview of magnetic bearing technology for gas turbine engines, Nasa-Tm—2004-213177. (2004) 1–7.
[230] A. Kondoleon, W. Kelleher, Soft magnetic alloys for high temperature radial magnetic bearings, in: Proc. 7th Internat. Symp. Magn. Bear., 2000: pp. 111–116.
[231] M. Ohsawa, K. Yoshida, H. Minomiya, T. Furuya, E. Marui, High-temperature blower for molten carbonate fuel cell supported by magnetic bearings, in: Proc. 6th Internat. Symp. Magn. Bear., 1998, pp. 32–41.
[232] M. Mekhiche, S. Nichols, J. Oleksy, K. Young, J. Kiley, D. Havenchill, 50 krpm, 1,100°F magnetic bearingsfor jet turbine engines, in: Proc. 7th Internat. Symp. Magn. Bear., Zurich, 2000: pp. 123–128.
[233] L. Xu, L. Wang, G. Schweitzer, Development for magnetic bearings for high temperature suspension, in: Proc. 7th Internat. Symp. Magn. Bear., 2000, pp. 117–123.
[234] L. Xu, J. Zhang, S. Gerhard, High temperature displacement sensor, 2005.
[235] A.J. Provenza, G.T. Montague, M.J. Jansen, A.B. Palazzolo, R.H. Jansen, High temperature characterization of a radial magnetic bearing for turbomachinery, J. Eng. Gas Turbines Power. 127 (2005) 437, https://doi.org/10.1115/1.1807413.
[236] B. Dong, K. Wang, B. Han, S. Zheng, Thermal analysis and experimental validation of a 30 kW 60000 r/min high-speed permanent magnet motor with magnetic bearings, IEEE Access. PP (2019) 1–1. https://doi.org/10.1109/ACCESS.2019.2927464.
[237] N.E. Technology, Study of Active Magnetic bearing for Helium Circulator in HTR-10, (2007) 1–6.
[238] Y. Guan, S. Liu, H. Li, Y. Fan, Y. Zhang, Study on magnetic bearings system in axial-flow blood pump, 2010 Int. Conf. Mech. Autom. Control Eng. MACE2010. (2010) 3903–3907. https://doi.org/10.1109/MACE.2010.5535945.
[239] C.R. Knospe, Active magnetic bearings for machining applications, Control Eng. Pract. (2007), https://doi.org/10.1016/j.conengprac.2005.12.002.
[240] X. Zhenyu, Y. Kun, W. Liantang, W. Xiao, Z. Hongkai, Characteristics of motorized spindle supported by active magnetic bearings, Chinese J. Aeronaut. 27 (2014) 1619–1624, https://doi.org/10.1016/j.cja.2014.10.031.
[241] H. Chen, S. Chang, Genetic algorithms based optimization design of a PID controller for an active magnetic bearing, IJCSNS Int J. Comput. Sci. Netw. Secur. 6 (2006) 95–99.

[242] W. Grega, A. Pilat, Comparison of linear control methods for an AMB system, Int. J. Appl. Math. Comput. Sci. 15 (2005) 245–255. http://matwbn.icm.edu.pl/ksiazki/amc/amc15/amc1528.pdf.
[243] D. Kozanecka, Promieniowe Aktywne Łożysko Magnetyczne Sterowane Cyfrowo, (1999) 12–14.
[244] B. Polajžer, J. Ritonja, G. Štumberger, D. Dolinar, J.P. Lecointe, Decentralized PI/PD position control for active magnetic bearings, Electr. Eng. 89 (2006) 53–59, https://doi.org/10.1007/s00202-005-0315-1.
[245] I. Arredondo, J. Jugo, V. Etxebarria, Modeling and control of a flexible rotor system with AMB-based sustentation, ISA Trans. 47 (2008) 101–112, https://doi.org/10.1016/J.ISATRA.2007.04.004.
[246] T.P. Deuver, G. V Brown, R.H. Jansen, Estimator based controller for high speed flywheel magnetic bearing system, in: IECEC '02. 2002 37th Intersoc. Energy Convers. Eng. Conf. 2002., 2002, pp. 227–232. https://doi.org/10.1109/IECEC.2002.1392014.
[247] K.-Y.Y. Chen, P.-C.C. Tung, M.-T.T. Tsai, Y.-H.H. Fan, A self-tuning fuzzy PID-type controller design for unbalance compensation in an active magnetic bearing, Expert Syst. Appl. 36 (2009) 8560–8570, https://doi.org/10.1016/j.eswa.2008.10.055.
[248] C.L. Brown, P.O. Box, An experimental study on PID tuning methods for active magnetic bearing systems Parinya Anantachaisilp and, Zongli Lin * 5 (2013) 146–154.
[249] M. Chen, C.R. Knospe, Control approaches to the suppression of machining chatter using active magnetic bearings, IEEE Trans. Control Syst. Technol. 15 (2007) 220–232, https://doi.org/10.1109/TCST.2006.886419.
[250] T.K. Psonis, P.G. Nikolakopoulos, E. Mitronikas, Design of a PID controller for a linearized magnetic bearing, Int. J. Rotating Mach. 2015 (2015).
[251] S. Gupta, J. Laldingliana, S. Debnath, P.K. Biswas, Closed loop control of active magnetic bearing using PID controller, 2018 Int. Conf. Comput. Power Commun. Technol. GUCON 2018. (2019) 686–690. https://doi.org/10.1109/GUCON.2018.8675123.
[252] M. Gohari, Integration intelligent estimators to disturbance observer to enhance robustness of active magnetic bearing controller, Int. J. Control Sci. Eng. 7 (2017) 25–31, https://doi.org/10.5923/j.control.20170702.01.
[253] Q. Li, W. Wang, B. Weaver, X. Shao, Active rotordynamic stability control by use of a combined active magnetic bearing and hole pattern seal component for back-to-back centrifugal compressors, Mech. Mach. Theory. 127 (2018) 1–12, https://doi.org/10.1016/j.mechmachtheory.2018.04.018.
[254] M.J. Mohamed, Comparison between PID and FOPID controllers based on particle swarm optimization, in: Second Eng. Conf. Control. Comput. Mechatronics Eng., 2014.
[255] G.-Q. Zeng, J. Chen, Y.-X. Dai, L.-M. Li, C.-W. Zheng, M.-R. Chen, Design of fractional order PID controller for automatic regulator voltage system based on multi-objective extremal optimization, Neurocomputing. 160 (2015) 173–184, https://doi.org/10.1016/J.NEUCOM.2015.02.051.
[256] P. Anantachaisilp, Z. Lin, Fractional order PID control of rotor suspension by active magnetic bearings, Actuators. 6 (2017) 4, https://doi.org/10.3390/act6010004.
[257] R. Raja, R. Parveen, Implementation of integer order PID controller and fractional order PID controller using genetic algorithm for maglev system, 4 (2018) 1833–1837.
[258] S.K. Verma, S. Yadav, S.K. Nagar, Optimal Fractional Order PID Controller for Magnetic Levitation System, (n.d.).
[259] S. Folea, C.I. Muresan, R. De Keyser, C.M. Ionescu, Theoretical analysis and experimental validation of a simplified fractional order controller for a magnetic levitation system, IEEE Trans. Control Syst. Technol. 24 (2016) 756–763.
[260] A.M.A.-H. Shata, R.A. Hamdy, A.S. Abdelkhalik, I. El-Arabawy, A fractional order PID control strategy in active magnetic bearing systems, Alexandria Eng. J. 57 (2018) 3985–3993, https://doi.org/10.1016/J.AEJ.2018.01.020.
[261] Z. Bingul, O. Karahan, Comparison of PID and FOPID controllers tuned by PSO and ABC algorithms for unstable and integrating systems with time delay, Optim. Control Appl. Methods. 39 (2018) 1431–1450, https://doi.org/10.1002/oca.2419.
[262] S. Zerkaoui, F. Druaux, E. Leclercq, D. Lefebvre, Stable adaptive control with recurrent neural networks for square MIMO non-linear systems, Eng. Appl. Artif. Intell. 22 (2009) 702–717, https://doi.org/10.1016/J.ENGAPPAI.2008.12.005.
[263] M.M. Hsu, S.C. Chen, V.S. Nguyen, T.H. Hu, Fuzzy and online trained adaptive neural network controller for an AMB system, J. Appl. Sci. Eng. 18 (2015) 47–58, https://doi.org/10.6180/jase.2015.18.1.07.
[264] Heeju Choi, G. Buckner, N. Gibson, Neural robust control of a high-speed flexible rotor supported on active magnetic bearings, in: 2006 Am. Control Conf., IEEE, 2006, p. 6 pp. https://doi.org/10.1109/ACC.2006.1657290.
[265] Y. Harkouss, S. Mcheik, A. Roger, Accurate wavelet neural network for efficient controlling of an active magnetic bearing system, J. Comput. Sci. 6 (2010) 1457–1464, https://doi.org/10.3844/jcssp.2010.1457.1464.
[266] Y.N. Zhuravlyov, On LQ-control of magnetic bearing, IEEE Trans. Control Syst. Technol. 8 (2000) 344–350, https://doi.org/10.1109/87.826805.
[267] J.-M. Ginoux, From the Series-Dynamo Machine to the Singing Arc: Gérard-Lescuyer, Blondel, Poincaré, in: Arch. Ser. Springer-Verlag, 2017: pp. 3–37. https://doi.org/10.1007/978-3-319-55239-2_1.
[268] Z. Gosiewski, A. Mystkowski, Sterowanie odporne układem łożysk magnetycznych w maszynach wirnikowych, Zesz .Nauk. Politech. Białostockiej. Budowa i Eksploat. Masz. 13 (2006) 25–39.
[269] E. Lantto, Robust control of magnetic bearings in subcritical machines, 1999.
[270] W. Ding, C. Zhu, T. Ming, Z. Bin, The effect of controllers on the dynamic behaviour of a rotor supported on active magnetic bearings, Proc. - Int. Conf. Electr. Control Eng. ICECE 2010. (2010) 2336–2339. https://doi.org/10.1109/iCECE.2010.576.
[271] L. Dong, S. You, Adaptive control of an active magnetic bearing with external disturbance, ISA Trans. 53 (2014) 1410–1419, https://doi.org/10.1016/J.ISATRA.2013.12.028.
[272] F. Betschon, C.R. Knospe, Reducing magnetic bearing currents via gain scheduled adaptive control, IEEE/ASME Trans. Mechatron. 6 (2001) 437–443, https://doi.org/10.1109/3516.974857.
[273] F. Gürleyen, Ç.A.Ğ.R.I. Bahadir, Adaptive control strategy for active magnetic bearings, in: IFAC Proc. Vol., 2006.
[274] R. Lee, T. Chen, Adaptive control of active magnetic bearing against milling dynamics, Appl. Sci. 6 (2016) 52, https://doi.org/10.3390/app6020052.
[275] S. Palis, M. Stamann, T. Schallschmidt, Nonlinear adaptive control of magnetic bearings, in: 2007 Eur. Conf. Power Electron. Appl., IEEE, 2007: pp. 1–10. https://doi.org/10.1109/EPE.2007.4417553.
[276] L. Di, Z. Lin, Control of a flexible rotor active magnetic bearing test rig : a characteristic model based all-coefficient adaptive control approach, 12 (2014) 1–12. https://doi.org/10.1007/s11768-014-0184-0.
[277] B.C. R., S.M. N., B.E. Granville, Vibration control of multi-mode rotor-bearing systems, Proc. R. Soc. London. A. Math. Phys. Sci. 386 (1983) 77–94. https://doi.org/10.1098/rspa.1983.0027.
[278] M.N. Sahinkaya, M.O.T. Cole, C.R. Burrows, Fault detection and tolerance in synchronous vibration control of rotor-magnetic bearing systems, Proc. Inst. Mech. Eng. Part C J. Mech. Eng. Sci. 215 (2001) 1401–1416, https://doi.org/10.1243/0954406011524775.
[279] A.-H.G. Abulrub, M.N. Sahinkaya, C.R. Burrows, P.S. Keogh, Adaptive control of active magnetic bearings to prevent rotor-bearing contact, (2008) 1523–1529. https://doi.org/10.1115/imece2006-13993.
[280] M.-J. Jang, C.-L. Chen, Y.-M. Tsao, Sliding mode control for active magnetic bearing system with flexible rotor, J. Franklin Inst. 342 (2005) 401–419, https://doi.org/10.1016/J.JFRANKLIN.2005.01.006.
[281] Z. Gosiewski, M. Żokowski, Sliding Mode Control for Active Magnetic Bearings, 2006.
[282] A. Sinha, K.L. Mease, K.W. Wang, Sliding mode control of a rigid rotor via magnetic bearings, 38 (1991) 209-217 BT-Modal Analysis, Modeling, Diagnostic. http://www.scopus.com/inward/record.url?scp=0025750193&partnerID=8YFLogxK.
[283] S. Sivrioglu, K. Nonami, Sliding mode control with time-varying hyperplane for AMB systems, IEEE/ASME Trans. Mechatron. 3 (1998) 51–59, https://doi.org/10.1109/3516.662868.
[284] C.-L. Chen, R.-L. Xu, Tracking control of robot manipulator using sliding mode controller with performance robustness, J. Dyn. Syst. Meas. Control. 121 (1999) 64–70, https://doi.org/10.1115/1.2802443.

[285] V.I. Utkin, Sliding modes in control and optimization, 2012. https://doi.org/10.1007/978-3-642-84379-2.
[286] Z. Gosiewski, M. Żokowski, Sterowanie ślizgowe aktywnego łożyska magnetycznego, Zesz. Nauk. Politech. Białostockiej. Budowa i Eksploat. Masz. Z. 13 (2006) 57–70.
[287] H. Li, X. Chen, The sliding variable structure control of mixed magnetic bearing system, in: 2010 Int. Conf. Intell. Comput. Technol. Autom. ICICTA 2010. 3 (2010) 959–962. https://doi.org/10.1109/ICICTA.2010.672.
[288] K. Falkowski, M. Henzel, High efficiency radial passive magnetic bearing, Solid State Phenom. 164 (2010) 360–365, https://doi.org/10.4028/www.scientific.net/SSP.164.360.
[289] F. Dohnal, R. Markert, Enhancement of external damping of a flexible rotor in active magnetic bearings by time-periodic stiffness variation, J. Syst. Des. Dyn. 5 (2011) 856–865, https://doi.org/10.1299/jsdd.5.856.
[290] Y. Liu, S. Ming, S. Zhao, J. Han, Y. Ma, Research on automatic balance control of active magnetic bearing-rigid rotor system, Shock Vib. 2019 (2019), https://doi.org/10.1155/2019/3094215.
[291] C.H. Hannan, Anti-friction bearings, 1969. https://doi.org/10.1016/0022-2569(69)90054-8.
[292] E.V. Zaretsky, A. Palmgren revisited-A basis for bearing life prediction, Lubr. Eng. 54 (1998) 18–23. https://ntrs.nasa.gov/archive/nasa/casi.ntrs.nasa.gov/19970025228.pdf.
[293] P.K. Gupta, Current status of and future innovations in rolling bearing modeling, Tribol. Trans. 54 (2011) 394–403, https://doi.org/10.1080/10402004.2010.551805.
[294] H. Cao, L. Niu, S. Xi, X. Chen, Mechanical model development of rolling bearing-rotor systems: a review, Mech. Syst. Signal Process. 102 (2018) 37–58, https://doi.org/10.1016/j.ymssp.2017.09.023.
[295] Z. Shi, J. Liu, An improved planar dynamic model for vibration analysis of a cylindrical roller bearing, Mech. Mach. Theory. 153 (2020), https://doi.org/10.1016/j.mechmachtheory.2020.103994 103994.
[296] L. Wang, R.W. Snidle, L. Gu, Rolling contact silicon nitride bearing technology: a review of recent research, Wear. 246 (2000) 159–173, https://doi.org/10.1016/S0043-1648(00)00504-4.
[297] B. Fang, J. Zhang, K. Yan, J. Hong, M. Yu Wang, A comprehensive study on the speed-varying stiffness of ball bearing under different load conditions, Mech. Mach. Theory. 136 (2019) 1–13, https://doi.org/10.1016/j.mechmachtheory.2019.02.012.
[298] A. Cubillo, S. Perinpanayagam, M. Esperon-Miguez, A review of physics-based models in prognostics: application to gears and bearings of rotating machinery, Adv. Mech. Eng. 8 (2016) 1–21, https://doi.org/10.1177/1687814016664660.
[299] P.M. Lugt, A review on grease lubrication in rolling bearings, Tribol. Trans. 52 (2009) 470–480, https://doi.org/10.1080/10402000802687940.
[300] R.B. Randall, J. Antoni, Rolling element bearing diagnostics-A tutorial, Mech. Syst. Signal Process. 25 (2011) 485–520, https://doi.org/10.1016/j.ymssp.2010.07.017.
[301] J.A. Tichy, D.M. Meyer, Review of solid mechanics in tribology, Int. J. Solids Struct. 37 (2000) 391–400, https://doi.org/10.1016/S0020-7683(99)00101-8.
[302] A. Senatore, T.V.V.L.N. Rao, Partial slip texture slider and journal bearing lubricated with newtonian fluids: a review, J. Tribol. 140 (2018), https://doi.org/10.1115/1.4039226 040801.
[303] F. Marques, P. Flores, J.C. Pimenta Claro, H.M. Lankarani, A survey and comparison of several friction force models for dynamic analysis of multibody mechanical systems, Nonlinear Dyn. 86 (2016) 1407–1443, https://doi.org/10.1007/s11071-016-2999-3.
[304] L. Niu, H. Cao, H. Hou, B. Wu, Y. Lan, X. Xiong, Experimental observations and dynamic modeling of vibration characteristics of a cylindrical roller bearing with roller defects, Mech. Syst. Signal Process. 138 (2020), https://doi.org/10.1016/j.ymssp.2019.106553 106553.
[305] E.E. Nunez, R. Gheisari, A.A. Polycarpou, Tribology review of blended bulk polymers and their coatings for high-load bearing applications, Tribol. Int. 129 (2019) 92–111, https://doi.org/10.1016/j.triboint.2018.08.002.
[306] A.B. Palazzolo, R.R. Lin, A.F. Kascak, J. Montague, R.M. Alexander, Test and theory for piezoelectric actuator-active vibration control of rotating machinery, Am. Soc. Mech. Eng. Des. Eng. Div. 18–1 (1989) 367–374.
[307] P. Tang, A. Palazzolo, A. Kascak, G. Montague, W. Li, Combined piezoelectric-hydraulic actuator based active vibration control for rotordynamic system, J. Vib. Acoust. Trans. ASME. 117 (1995) 285–293, https://doi.org/10.1115/1.2874449.
[308] J.M. Vance, D. Ying, Experimental measurements of actively controlled bearing damping with an electrorheological fluid, Proc. ASME Turbo Expo. 4 (1999) 1–10, https://doi.org/10.1115/99-GT-017.
[309] C. Zhu, A disk-type magneto-rheological fluid damper for rotor system vibration control, J. Sound Vib. 283 (2005) 1051–1069, https://doi.org/10.1016/j.jsv.2004.06.031.
[310] W.I.J.F. Heshmat H., On the performance of hybrid foil-magnetic bearings, J. Eng. Gas Turbines Power. 122 (2000) 73–81. https://doi.org/10.1115/1.483178.
[311] J.M. Krodkiewski, L. Sun, Modelling of multi-bearing rotor system incorporating an active journal bearing, J. Sound Vib. 210 (1998) 215–229, https://doi.org/10.1006/jsvi.1997.1323.
[312] R.K. Wampler, D. Lancisi, R. Gauthier, V. Indravudh, H. Cao, F. Lin, R.B. Fine, A sealless centrifugal blood pump suspended with synergistic passive magnetic and hydrodynamic bearings, ASAIO J. 45 (1999) 173, https://doi.org/10.1097/00002480-199903000-00215.
[313] Q. Tan, W. Li, B. Liu, Investigations on a permanent magnetic-hydrodynamic hybrid journal bearing, Tribol. Int. 35 (2002) 443–448, https://doi.org/10.1016/S0301-679X(02)00026-9.
[314] M. Darłak, A. Korczak, I. Altyntsev, M. Czak, J. Junak, M. Gawlikowski, R. Kustosz, Opracowanie konstrukcji odśrodkowej pompy wspomagania serca ReligaHeart ROT, Pol. Protezy Serca, Opracowania Konstr. Badania Kwalif. Przedkliniczne i Klin. (2013) 463–533.
[315] R. Pilotto, R. Nordmann, T. Jungblut, S. Herold, Vibration control of a flexible rotor with oil-film bearings by means of active magnetic bearings, in: Proc. ISMA2016 Incl. USD2016, International Conference on Noise and Vibration Engineering (ISMA), Leuven, 2016: pp. 1249–1260. http://past.isma-isaac.be/downloads/isma2016/papers/isma2016_0765.pdf.
[316] A. Abed, A. Bouzidane, M. Thomas, H. Zahloul, Performance characteristics of a three-pad hydrostatic squeeze film damper compensated with new electrorheological valve restrictors, Proc. Inst. Mech. Eng. Part J J. Eng. Tribol. 231 (2017) 889–899, https://doi.org/10.1177/1350650116683622.
[317] S.-N. Jeong, H.-J. Ahn, S.-J. Kim, Y.-B. Lee, Bending mode vibration control of a flexible shaft supported by a hybrid air-foil magnetic bearing, J. Korean Soc. Tribol. Lubr. Eng. 27 (2011) 57–64, https://doi.org/10.9725/kstle.2011.27.2.057.
[318] A. Martowicz, J. Roemer, M. Lubieniecki, G. Żywica, P. Bagiński, Experimental and numerical study on the thermal control strategy for a gas foil bearing enhanced with thermoelectric modules, Mech. Syst. Signal Process. 138 (2020), https://doi.org/10.1016/j.ymssp.2019.106581.
[319] A. El-Shafei, M. El-Hakim, Development of a test rig and experimental verification of the performance of HSFDs for active control of rotors, in: Vol. 5 Manuf. Mater. Metall. Ceram. Struct. Dyn. Control. Diagnostics Instrumentation; Educ. IGTI Sch. Award, American Society of Mechanical Engineers, 1995. https://doi.org/10.1115/95-GT-256.
[320] S. Jeong, Y.B. Lee, Effects of eccentricity and vibration response on high-speed rigid rotor supported by hybrid foil-magnetic bearing, Proc. Inst. Mech. Eng. Part C J. Mech. Eng. Sci. 230 (2016) 994–1006, https://doi.org/10.1177/0954406215619449.
[321] M.N. Pham, H.J. Ahn, Experimental optimization of a hybrid foil-magnetic bearing to support a flexible rotor, Mech. Syst. Signal Process. 46 (2014) 361–372, https://doi.org/10.1016/j.ymssp.2014.01.012.
[322] J. Park, K. Sim, A Feasibility study of controllable gas foil bearings with piezoelectric materials via rotordynamic model predictions, in: Vol. 7B Struct. Dyn., ASME, 2018, p. V07BT34A034. https://doi.org/10.1115/GT2018-76273.
[323] C. Ho, S.J. Kim, S.H. Lee, H.S. Kim, United States Patent No.: US 8,772,992 B2, 2014. https://patentimages.storage.googleapis.com/f0/1a/0e/d06883e242788d/US8772992.pdf.
[324] A.M. Baz, Active and Passive Vibration Damping, 2019. https://doi.org/10.1002/9781118537619.

[325] J.L. Nikolajsen, R. Holmes, V. Gondhalekar, Investigation of an electromagnetic damper for vibration control of a transmission shaft, Proc. Inst. Mech. Eng. 193 (1979) 331–336, https://doi.org/10.1243/PIME_PROC_1979_193_035_02.
[326] A.B. Palazzolo, S. Jagannathan, A.F. Kascak, G.T. Montague, L.J. Kiraly, Hybrid active vibration control of rotorbearing systems using piezoelectric actuators, J. Vib. Acoust. 115 (1993) 111, https://doi.org/10.1115/1.2930303.
[327] J.K. Martin, Improved performance of hydrodynamic bearings by proactive adjustment, Mec. Ind. 12 (2011) 17–24, https://doi.org/10.1051/meca/2011005.
[328] G. Żywica, P. Bagiński, Ł. Breńkacz, W. Miąskowski, P. Pietkiewicz, K. Nalepa, Dynamic state assessment of the high-speed rotor based on a structural-flow model of a foil bearing, Diagnostyka. 18 (2017) 95–102. http://www.scopus.com/inward/record.url?eid=2-s2.0-85018627601&partnerID=MN8TOARS.
[329] S.S. Rao, Engineering Optimization: Theory and Practice: Fourth Edition, 2009. https://doi.org/10.1002/9780470549124.
[330] K.K. Iniewski, Smart Sensors for Industrial Applications, CRC Press, 2017, https://doi.org/10.1201/b14875.