The basic control model of an active foil bearing

Łukasz BREŃKACZ*, Natalia SZEWCZUK-KRYPA**, Łukasz WITANOWSKI* and Marta DROSIŃSKA-KOMOR**
*Institute of Fluid Flow Machinery, Polish Academy of Sciences
Fiszera 14, Gdansk, 80-231, Poland
E-mail: lukasz.brenkacz@imp.gda.pl
**Department of Ocean Engineering and Ship Technology, Gdansk University of Technology
G. Narutowicza 11/12, Gdansk, 80-233, Poland

Abstract

The article presents the conception of a foil bearing control system, in which a feedback loop is used. The purpose of this system is to improve the dynamic properties of the active foil bearing by changing its geometry. In the system presented, the change in the geometry relates to the size of the lubrication gap and the bearing foils. The system consists of a shaft driven by an electro spindle and radial foil bearings with variable geometry. The system whose main task is to optimise the dynamic properties of a bearing consists of three integrated subsystems. The first subsystem is used to measure the position of the bearing and consists of displacement sensors which are arranged in pairs, perpendicularly to the rotor axis. This arrangement of the sensors makes it possible to determine the displacements of the bearing bush in two directions perpendicular to each other. This subsystem also enables signal processing, which allows to calculate the maximum vibration amplitude (based on measured displacements) in two mutually perpendicular directions. A properly processed signal is analysed by the control subsystem to determine the displacements of the bearing components, which can ensure the change of the dynamic properties of the rotor-bearing system during operation. At the initial stage of the research, it was assumed that the control system would be implemented through the appropriate type of controller. The change of the bearing bush is carried out by the executive subsystem that uses actuators. The changes introduced indirectly, by changing the dynamic properties of the gas film and the supporting foils of the foil bearing, make it possible, among other things, to reduce the vibration level and eliminate resonance vibrations.

Keywords : Foil bearing, Active bearing, Control system, Gas bearing, Mathematical model

1. Introduction

Gas bearings are increasingly popular due to their ability to operate at high speeds and high temperatures. Thanks to these properties, they are widely used in low-power rotary machines such as microturbines or compressors. In the case of these applications, also the high efficiency of this type of bearings is also important. Another significant advantage of gas bearings is the absence of a lubrication system. Such a system is complicated and, additionally, the expensive lubricating oil in the bearing system may cause undesirable contamination of the operating medium (San Andrés and Norsworthy, 2015)(Waumans et al., 2011). The absence of a lubrication system is also safe for the environment where possible oil spills can be a source of pollution (Gross, 1969). Despite a number of significant advantages, gas bearings also have significant disadvantages and limitations. Due to the properties of the lubricant, i.e. low viscosity, gas bearings have much worse vibration damping capabilities than conventional oil-lubricated bearings (Theisen et al., 2017)(Aguirre et al., 2008). Worse damping properties can cause increased vibrations due to machine unbalance and external interference. This phenomenon may be particularly intense in the resonance frequency range.

Pneumatic Hammer effect constitutes an important problem addressed in the context of the research on gas bearings (Al-Bender, 2009). The undesired effect can be minimized by proper control of the gas bearing. This control can be done by appropriately changing the geometry, supply pressure or bearing's load (Talukder and Stowell, 2003)(Blondeel et al., 2009).

In the literature, the solution commonly used to influence bearing geometry is the use of moving segments (titling-pads). The paper (Kwon et al., 2000) presents the design of a gas bearing in which three swinging segments are used. These segments are connected to the bearing housing with the use of moving joints. In the two joints piezoelectric actuators are placed, which in response to the applied voltage changed their length accordingly causing the displacement of pads. Between these segments and the rotating shaft supported by the bearing, a layer of gas is formed, which constitutes a lubrication wedge. The inclination of the pads to the shaft determines the pressure distribution of the lubricating film. The adequate change of the position of the segments allows compensation of the resultant force resulting from the pressure distribution in the lubricating film, which may result in active damping of the shaft-bearing system's natural vibrations. The bearing control system is responsible for the appropriate voltage applied to the piezoelectric actuators. In this case, a PID type controller was used.

In the works (Morosi and Santos, 2011)(Morosi, 2011), the construction of a gas bearing was presented, in which the effect of the amplification of natural vibrations is eliminated by active change of supply air pressure. In this structure, the air injection systems of the bearing are used. In this case, four holes for the lubricant supply, i.e. air, are symmetrically located in the bearing housing. Four piezoelectric actuators are also used in the system, the displacement of which determined the air injection duct obstruction. The ducts could be covered thanks to the use of pins, the displacement of which was determined by piezoelectric elements. A slightly different design, in which active control was also carried out by the injection of supply air was proposed in the work (Mizumoto et al., 2002). This concept has six bearing supply holes. In each of the holes a piezoelectric limiter is used. The pressure distribution of the lubricating film in this case is regulated by controlling the stroke of the mentioned limiter. Each limiter was controlled by a separate control system with a PI-type controller.

In addition to the aforementioned piezoelectric actuators, also pneumatic valves are used to change the air flow supplying the bearing. The paper (Russell, 1994) presents a concept in which the air supplying the bearing flows through the valve. The correct position of the valve determines the pressure of the supply air flow. The system also uses a compressor to supply the air tank so that its pressure is kept at the appropriate level.

Foil bearings are a certain modification of gas bearings. Between the gas film and the bush, supporting foils are added, which contribute to the introduction of additional stiffness and additional damping to the system. The research carried out shows that bearings of such design can operate under extreme conditions (Beck, 2003). Air foil bearings are particularly suitable for operation in high temperature. The viscosity of gas bearings increases with increasing temperature, which can have a positive effect on the dynamic properties of gas bearings compared to fluid bearings, the viscosity of which decreases with increasing temperature. Foil bearings can be widely used in high-speed rotating machines, e.g. gas turbines, turbochargers, compressors (Dellacorte, 2018).

While there are many articles available on the control of gas or fluid bearings, it is almost impossible to find information on the control model for foil bearings. The purpose of this article is to fill this gap by providing an example of a control model of an active foil bearing.

2. Bearing model

The foil bearing model is presented as a combination of a classic gas bearing with a layer of supporting foils (Fig. 1). A layer of supporting foils is located between the gas film and the stationary bush. It provides additional stiffness and damping. For the purpose of these analyses, it was assumed that the stiffness and damping values of the gas film can be added together with the stiffness and damping values of the supporting foil. This resulted in equivalent stiffness and damping. The values of stiffness and damping coefficients of the gas film were assumed on the basis of numerical calculations as a function of the lubrication gap size. The stiffness and damping values of the supporting foil were

assumed to be constant. The adopted bearing model assumes that changes of geometry obtained by increasing and decreasing the diameter of the bush (marked in the figure with x) directly affect the change of stiffness and damping factors of the gas film. The combined coefficients of the gas film and supporting foils are shown in the figure below in part b).

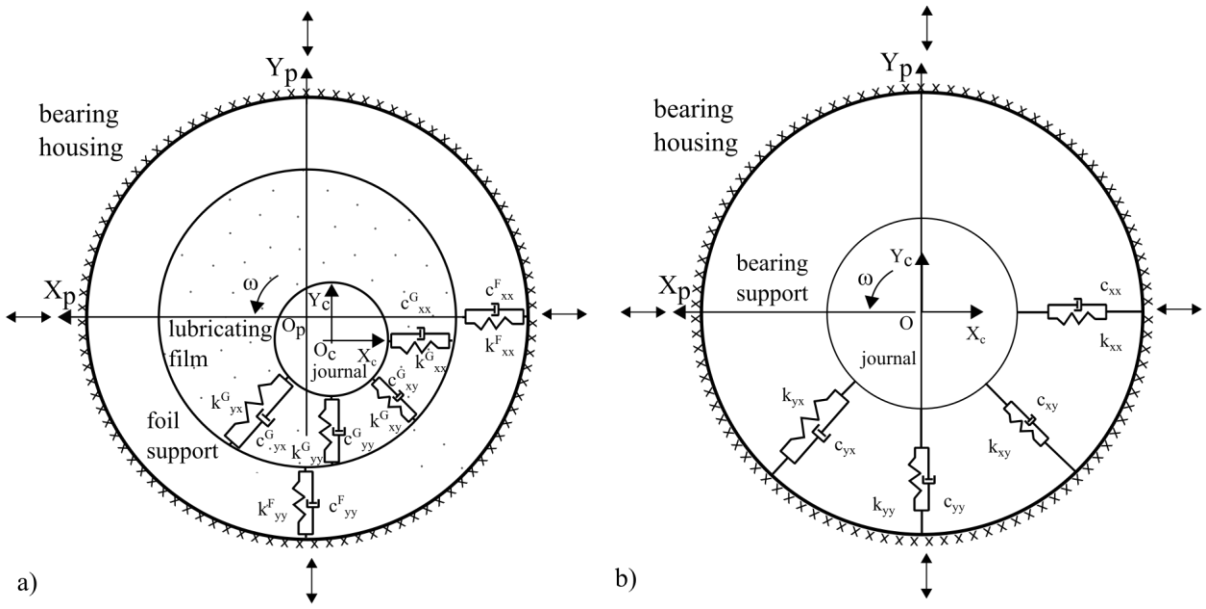

Fig. 1 Foil bearing model.

In the performed work, a second order linear differential equation was used to describe the relation between mass, stiffness and damping. The use of this equation is a common approach to the problem of journal bearing modeling. For the set speed f(t) of the shaft, the model is described by the following equation:

$$M\ddot{p}(t) + (C + \Omega G)\dot{p}(t) + Kp(t) = f(t) \tag{1}$$

where:
M – mass of the rotating shaft in the bearing,
C – coefficient of the equivalent damping of the bearing,
G – coefficient representing an asymmetrical gyroscopic effect,
K – coefficient of the equivalent stiffness of the bearing,
Ω – rotational speed,
p(t) – shaft displacement understood as the vibration amplitude of the system,
f(t) – external driving force acting on the shaft.

In the model, the shaft displacement along the main bearing axes is considered (p_{xx}, p_{yy}). The model developed takes into account both the main and oblique stiffness $(k_{xx}, k_{yy}, k_{xy}, k_{yx})$ and damping $(c_{xx}, c_{yy}, c_{xy}, c_{yx})$ coefficients. The main damping and stiffness coefficients $(c_{xx}, c_{yy}, k_{xx}, k_{yy})$ are considered as substitute values taking into account both the properties of the gas film and the supporting foil. The oblique coefficients relate directly to the lubricating film. Supporting foils are not characterized by oblique stiffness and damping coefficients. For the sake of simplicity, it was also assumed that the gyroscopic effect occurring in the system is zero G=0.

When using the described assumptions, the classical differential equation (1) takes the form of a matrix equation:

$$\begin{bmatrix} M_{xx} & 0 \\ 0 & M_{yy} \end{bmatrix} \begin{bmatrix} \ddot{p}_{xx}(t) \\ \ddot{p}_{yy}(t) \end{bmatrix} + \begin{bmatrix} c_{xx} & c_{xy} \\ c_{yx} & c_{yy} \end{bmatrix} \begin{bmatrix} \dot{p}_{xx}(t) \\ \dot{p}_{yy}(t) \end{bmatrix} + \begin{bmatrix} k_{xx} & k_{xy} \\ k_{yx} & k_{yy} \end{bmatrix} \begin{bmatrix} p_{xx}(t) \\ p_{yy}(t) \end{bmatrix} = \begin{bmatrix} f_{xx}(t) \\ f_{yy}(t) \end{bmatrix} \tag{2}$$

$$\begin{bmatrix} \ddot{p}_{xx}(t) \\ \ddot{p}_{yy}(t) \end{bmatrix} = \begin{bmatrix} 1/M_{xx} & 0 \\ 0 & 1/M_{yy} \end{bmatrix} \left[\begin{bmatrix} f_{xx}(t) \\ f_{yy}(t) \end{bmatrix} - \begin{bmatrix} c_{xx} & c_{xy} \\ c_{yx} & c_{yy} \end{bmatrix} \begin{bmatrix} \dot{p}_{xx}(t) \\ \dot{p}_{yy}(t) \end{bmatrix} - \begin{bmatrix} k_{xx} & k_{xy} \\ k_{yx} & k_{yy} \end{bmatrix} \begin{bmatrix} p_{xx}(t) \\ p_{yy}(t) \end{bmatrix} \right] \tag{3}$$

$$\begin{bmatrix} \ddot{p}_{xx} \\ \ddot{p}_{yy} \end{bmatrix} = \begin{bmatrix} 1/M_{xx} & 0 \\ 0 & 1/M_{yy} \end{bmatrix} \left[\begin{bmatrix} f_{xx} \\ f_{yy} \end{bmatrix} - \begin{bmatrix} c_{xx}\dot{p}_{xx} + c_{xy}\dot{p}_{yy} \\ c_{yx}\dot{p}_{xx} + c_{yy}\dot{p}_{yy} \end{bmatrix} - \begin{bmatrix} k_{xx}p_{xx} + k_{xy}p_{yy} \\ k_{yx}p_{xx} + k_{yy}p_{yy} \end{bmatrix} \right] \tag{4}$$

The matrix equation is divided into two differential equations:

$$\begin{cases} \ddot{p}_{xx} = \dfrac{1}{M_{xx}} \left[f_{xx} - (c_{xx}\dot{p}_{xx} + c_{xy}\dot{p}_{yy}) - (k_{xx}p_{xx} + k_{xy}p_{yy}) \right] \\ \ddot{p}_{yy} = \dfrac{1}{M_{yy}} \left[f_{yy} - (c_{yx}\dot{p}_{xx} + c_{yy}\dot{p}_{yy}) - (k_{yx}p_{xx} + k_{yy}p_{yy}) \right] \end{cases} \tag{5}$$

Each of the equations represents, respectively, the relationship between the stiffness and damping coefficients, the external driving forces acting on the shaft, and the shaft displacements, understood as the vibration amplitude in the x (p_{xx}) direction and in the y direction (p_{yy}).

The model assumes that a direct influence on the change of damping and stiffness coefficients of the gas film is exerted by a change in actuator position, which results in a change in the size of the bearing lubrication gap. Based on numerical calculations, the relationship between the change in actuator position and the main and oblique stiffness and damping coefficients in both horizontal and vertical directions were determined. For the sake of simplicity, the linear nature of the changes in these coefficients was assumed. Diagrams showing linear changes in stiffness and damping coefficients as a function of changes in the lubrication gap are shown in the figure (Fig. 2). These relationships were determined for a constant shaft speed. The calculation assumes that this speed is 18,000 [rpm]. There is an assumption that changing the geometry of the lubrication gap has an impact on the values of stiffness and damping coefficients. The values of these coefficients were calculated based on the Finite Element Method (FEM) using the MESWIR software (Kiciński, 2005).

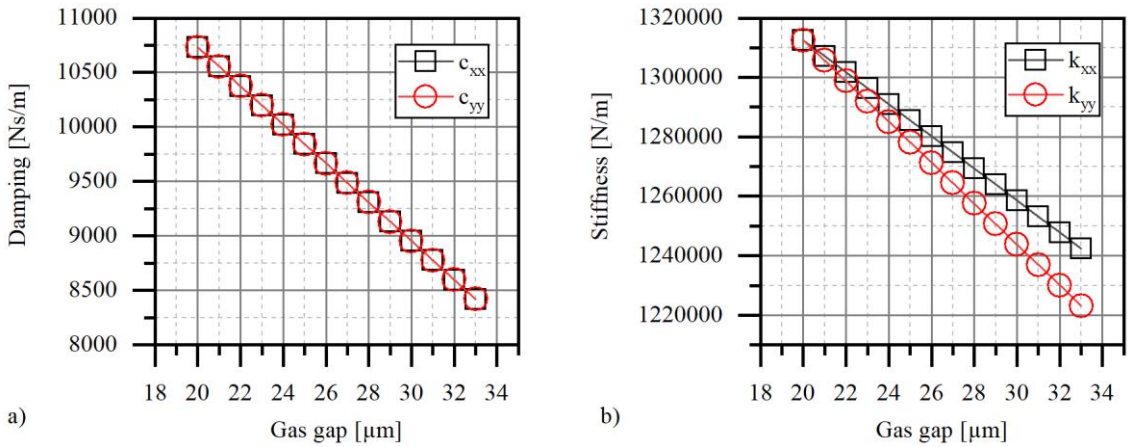

Fig. 2 Dependence of changes in damping (c_{xx}, c_{yy}) and elasticity (k_{xx}, k_{yy}) coefficients on actuator displacement (r_{xx}, r_{yy}).

Based on the linear relationship between the actuator displacement and the values of stiffness and damping coefficients, the coefficient values for characteristic actuator displacements (20, 30 μm) in x and y directions were determined.

Tab. 2.1. Comparison of the lubrication gap size and the corresponding stiffness and damping coefficients.

Lubrication gap size in y direction	$\mathbf{33 \times 10^{-6}}$	$\mathbf{20 \times 10^{-6}}$	**[m]**
$\boldsymbol{k_{yy}}$	1.2232×10^6	1.3125×10^6	**[N/m]**
$\boldsymbol{c_{yy}}$	8420	10730	**[Ns/m]**
$\boldsymbol{k_{yx}}$	0.638×10^6	0.43×10^6	**[N/m]**
$\boldsymbol{c_{yx}}$	532	358	**[Ns/m]**
Lubrication gap size in x direction	$\mathbf{33 \times 10^{-6}}$	$\mathbf{20 \times 10^{-6}}$	**[m]**
$\boldsymbol{k_{xx}}$	1.2423×10^6	1.3125×10^6	**[N/m]**
$\boldsymbol{c_{xx}}$	8420	10730	**[Ns/m]**
$\boldsymbol{k_{xy}}$	0.972×10^6	0.443×10^6	**[N/m]**
$\boldsymbol{c_{xy}}$	810	369	**[Ns/m]**

In the initial stage of work on the foil bearing model, it was assumed that the external force acting on the shaft-bearing system is a dynamic force with sinusoidal character of changes. The force results from residual rotor unbalance and speed. Therefore, a sinusoidal signal with an amplitude of 6 [N] was introduced to the model input. The force value was selected according to the maximum residual rotor unbalance allowed by the standard (ISO 10816-4 Mechanical vibration - Evaluation of machine vibration by measurement on non-rotating parts - Part 4: Gas turbine driven sets excluding aircraft derivatives, 1998) for the given speed and class G2.5. The model's response to the set force value is the course of the shaft displacement change over time. This signal is also sinusoidal, the amplitude of the signal obtained (pick-pick) represents the amplitude of vibrations occurring in the system in the direction under consideration for the given dynamic load. The vibration amplitude obtained for a given direction is identical to the displacement of the shaft in the direction under consideration.

On the basis of the system of differential equations (5), taking into account the characteristics of actuators and assumptions defining the nature of the driving force applied to the shaft-bearing system, a bearing block model was created (Fig. 3).

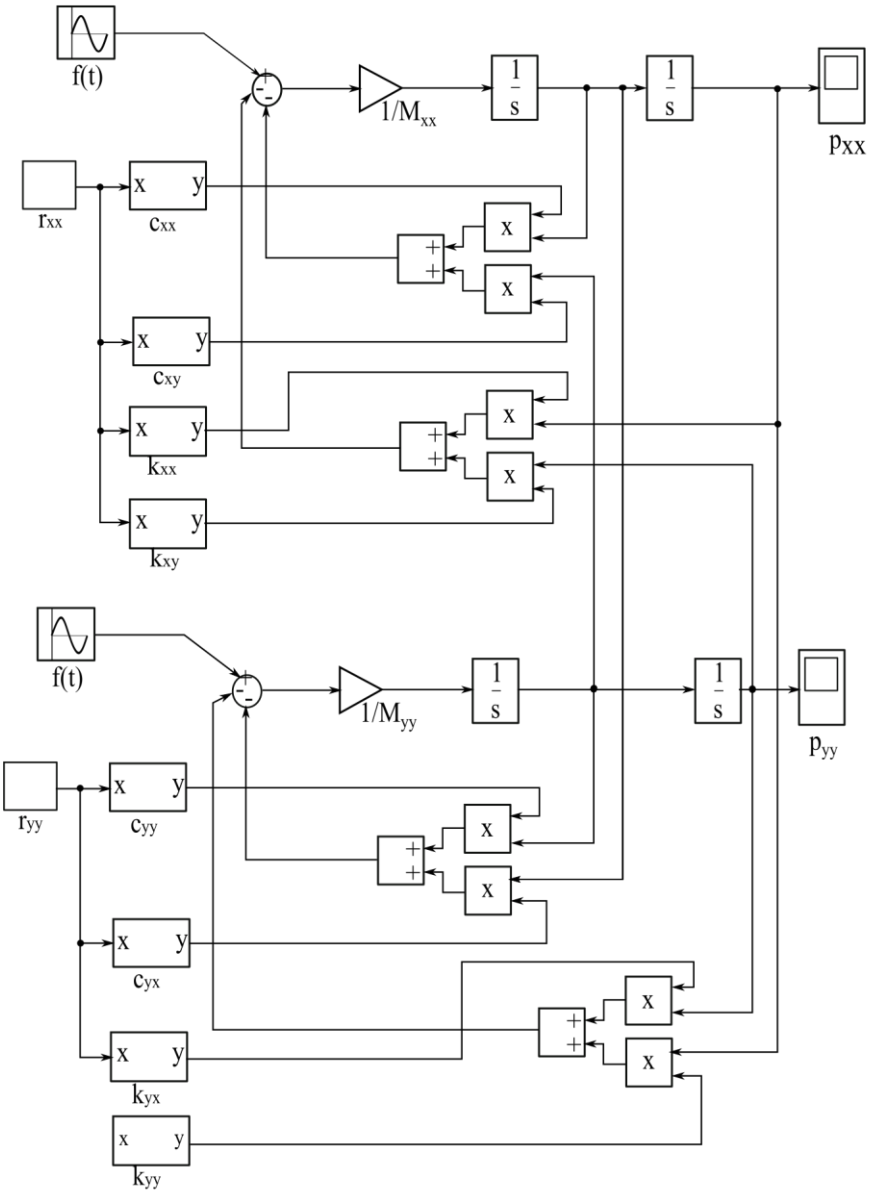

Fig. 3 Bearing block model.

3. Regulation system

In the next stage of work, the foil bearing model was extended with a control system. The main task of this system is to control and monitor the vibration amplitude during bearing operation by means of a controller which, on the basis of the value of regulation deviation e(t) resulting from the difference between the reference value for vibration amplitude $p_r(t)$ and the value obtained at a given moment p(t), acts on actuators increasing or decreasing the size of the bush with a signal of appropriate voltage U(t) (Fig. 4). The voltage value affects the displacement of the actuator r(t), which directly translates into a change in the size of the bearing bush. The actuators used for changing the diameter of the bearing were piezoelectric sensors PiezoDrive 150V 5x5x36mm (SA050536). The result is a change in the stiffness and damping of the lubricating film, resulting in a change in the vibration amplitude of the foil bearing.

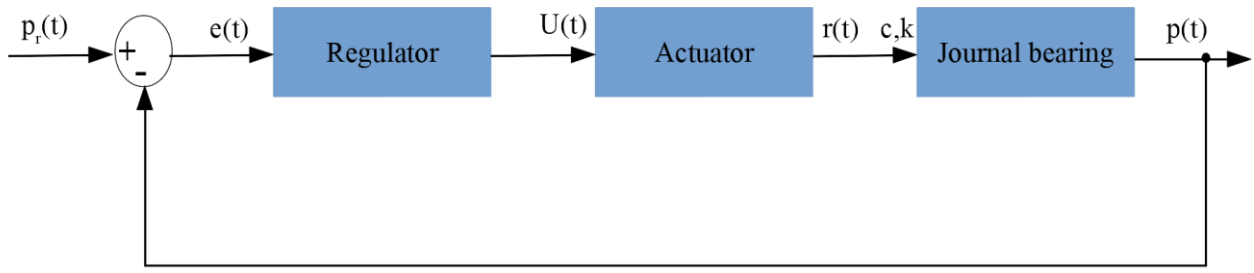

Fig. 4 Operation diagram of the system controlled by feedback loop.

4. Results of the simulation

The bearing model compliant with (Fig. 3) was for different variants of actuator displacement in two perpendicular directions – x and y. Simulations were performed to investigate how the model behaves for different sizes of the lubrication gap. Changes in this value were generated by changing the actuator. The main simulations were carried out for the two cases shown in the table (2.1). Different trajectories of the rotor journal were obtained for the determined lubrication gap sizes.

For the data contained in (2.1), the control process was carried out in which the actuator in the x direction and in the y direction moved, increasing from $20 \times 10^{-6}\,m$ to $33 \times 10^{-6}\,m$. The vibration amplitude was determined, which is shown in Fig. 5 The foil bearing system with the control system was also simulated. The PID controller was used.

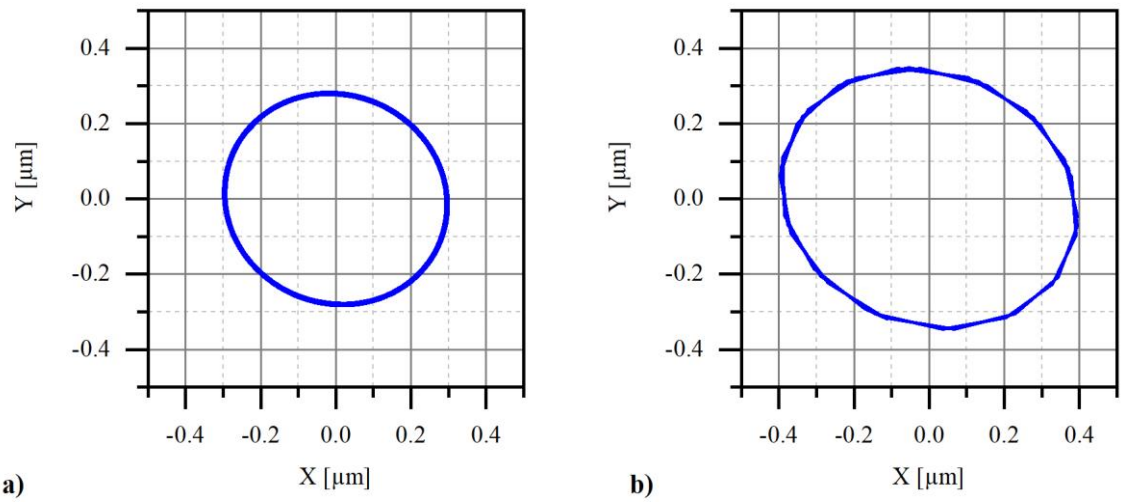

Fig. 5 Vibration trajectories for different lubrication gap sizes a) 20 µm, b) 33 µm.

For the control system described above, a test was performed consisting in the increase of the vibration amplitude from $0.2 \times 10^{-6}\,m$ to $0.45 \times 10^{-6}\,m$. The PID controller was used. The controller's task was to change the lubrication gap accordingly in order to achieve the intended result (Fig. 6). The transition diagram between the two previously assumed operating states of the rotor is shown in the figure below.

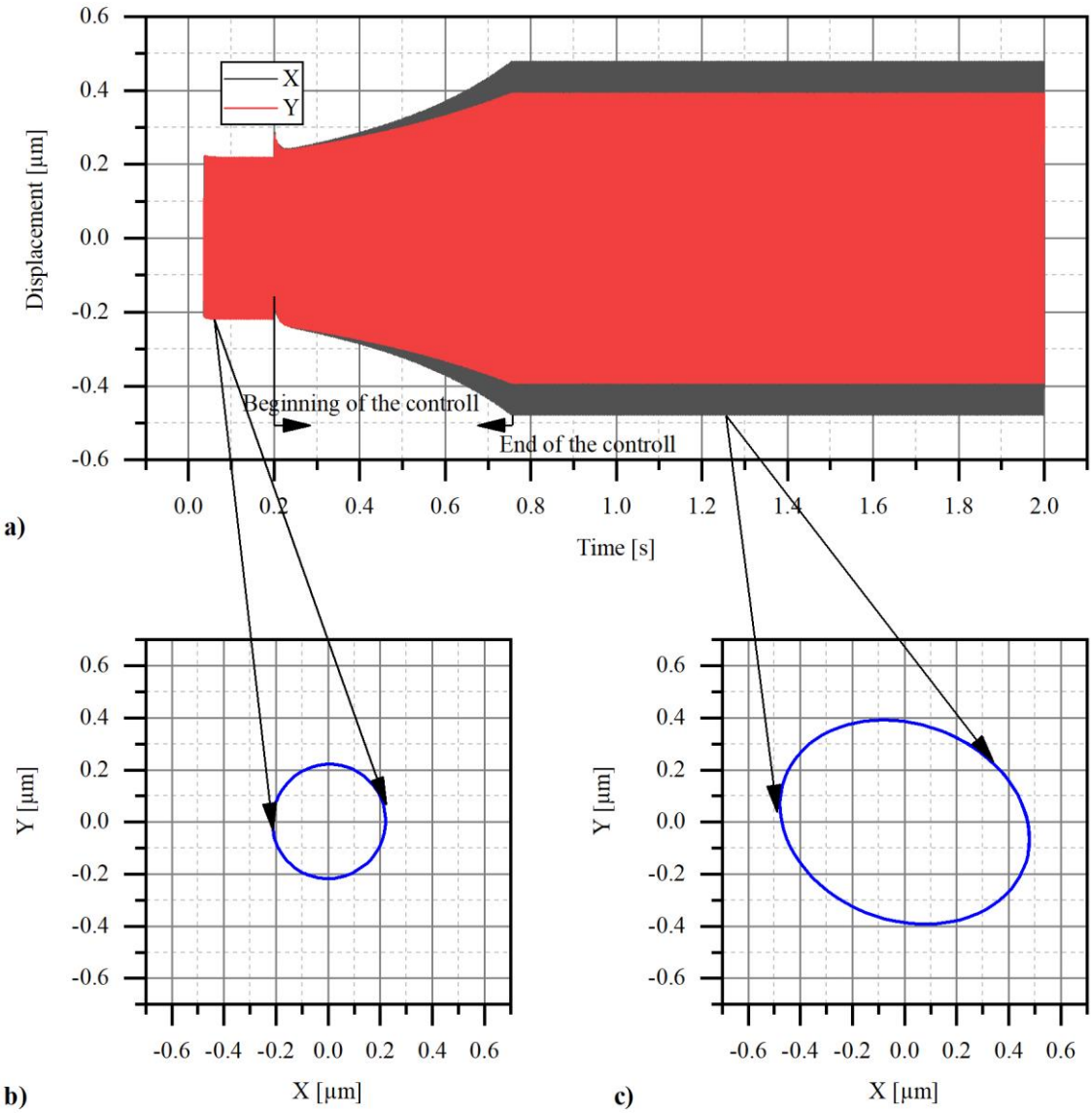

Fig. 6 Bearing displacement recorded during stable operation (first 0.2s) and bearing adjustment consisting in the increase of the amplitude (to 0.78s).

5. Conclusions

The paper presents a model of an active foil bearing. Foil bearings are a modification of the previously known gas bearings in which there is an additional layer of supporting foils between the gas film and the bush. The model described takes into account the stiffness and damping coefficients of both the lubricating film and the supporting foil. In the gas bearing model, both main and oblique stiffness and damping coefficients are taken into account. The summarized equivalent stiffness and damping values of the gas film and supporting film were used for control. The system uses the PID controller. The values of the stiffness and damping coefficients of the lubricating film used in the tests were determined on the basis of numerical calculations, they were described using the appropriate functions. The stiffness and damping values of the supporting foil are assumed to be constant. In practice, they will also be a function of changing the diameter of the bush.

The article presents the results of the simulation of the active foil bearing in which the size of the bearing bush was changed with the use of the actuator, which in turn affected the size of the lubrication gap. As a result of changes in the

diameter of the lubrication gap, the bearing journal vibration trajectories changed. The applied adjustment directly affects the actuator displacement, causing changes in the bearing journal trajectory. In the control system under research, the change in trajectory amplitude from $0.2 \times 10^{-6}\ m$ to $0.45 \times 10^{-6}\ m$ takes less than 0.6 s.

References

Aguirre, G., Al-Bender, F., and Van Brussel, H., A multiphysics coupled model for active aerostatic thrust bearings, IEEE/ASME International Conference on Advanced Intelligent Mechatronics, AIM, (2008), pp. 710–715.

Al-Bender, F., On the modelling of the dynamic characteristics of aerostatic bearing films: From stability analysis to active compensation, Precision Engineering, Vol.33, No.2, (2009), pp. 117–126.

Beck, R., *Bearing Design in Machinery: Engineering Tribology and Lubrication*. Dekker Mechanical Engineering.

Blondeel, E., Snoeys, R., and Devrieze, L., Dynamic Stability of Externally Pressurized Gas Bearings, Journal of Lubrication Technology, Vol.102, No.4, (2009), pp. 511.

Dellacorte, C., *Oil-Free Enabling Technology: Gas Foil Bearings*.

Gross, W.A., A review of developments in externally pressurized gas bearing technology since 1959, Journal of Tribology, Vol.91, No.1, (1969), pp. 161–165.

ISO 10816-4 Mechanical vibration - Evaluation of machine vibration by measurement on non-rotating parts - Part 4: Gas turbine driven sets excluding aircraft derivatives,.

Kiciński, J., *Dynamika wirników i łożysk ślizgowych*. Gdańsk: Maszyny Przepływowe.

Kwon, T., Qiu, J., and Tani, J., Control of Self-Excited Vibration of a Rotor System with Active Gas Bearing., Transactions of the Japan Society of Mechanical Engineers Series C, Vol.66, No.643, (2000), pp. 724–730.

Mizumoto, H., Arii, S., Kami, Y., Goto, K., Yamamoto, T., and Kawamoto, M., Active inherent restrictor for air-bearing spindles, Precision Engineering, Vol.19, No.2–3, (2002), pp. 141–147.

Morosi, S., From Hybrid to Actively-Controlled Gas Lubricated Bearings – Theory and Experiment PhD. Technical University of Denmark.

Morosi, S. and Santos, I.F., Active lubrication applied to radial gas journal bearings. Part 1: Modeling, Tribology International, Vol.44, No.12, (2011), pp. 1949–1958.

Russell, G.W., Air bearing control system, (1994).

San Andrés, L. and Norsworthy, J., Structural and Rotordynamic Force Coefficients of a Shimmed Bump Foil Bearing: An Assessment of a Simple Engineering Practice, *Volume 7A: Structures and Dynamics*. ASME, p. V07AT31A023.

Talukder, H.M. and Stowell, T.B., Pneumatic hammer in an externally pressurized orifice-compensated air journal bearing, Tribology International, Vol.36, No.8, (2003), pp. 585–591.

Theisen, L.R.S., Niemann, H.H., Galeazzi, R., and Santos, I.F., Enhancing damping of gas bearings using linear parameter-varying control, Journal of Sound and Vibration, Vol.395, (2017), pp. 48–64.

Waumans, T., Peirs, J., Al-Bender, F., and Reynaerts, D., Aerodynamic journal bearing with a flexible, damped support operating at 7.2 million DN, Journal of Micromechanics and Microengineering, Vol.21, No.10, (2011).